STRUCTURAL OPTIMIZATION OF SAE BAJA CAR FRAME

Submitted by

Akshay Murkute – Torsional analysis and system integration

Anket Hirachand Marathe – Roll-over impact analysis

Ivan Rodrigues – Side impact analysis

Karthik Ramagiri – Front impact analysis

Kaushik Munusamy Kabilan – Modal analysis

MAE 598- 2016

Final Report

ABSTRACT

Multi tubular space frames, often referred to as roll-cage acts as a structural embody for various types of automotive vehicles. The frame has to conform to the rules specified by SAE. The frame is subjected to the various dynamic and static loads encountered during front, side, roll over, torsional impact. The frame should be stiff enough to react against all the loads acting on it with apt strength to weight ratio. To meet these criterions it is important to consider various parameters involved in the design of a roll-cage, right from the material to be used up to the forces and impacts that it might encounter. Through this study, we aimed to design, analyse and optimize a roll-cage so as to achieve the target of apt strength to weight ratio. Factor of safety of 2 was set which gave the conservative design. CAD Modelling Software packages and Optimization package in ANSYS Workbench 16.0 was used for the study. The geometric characteristics of inner and outer radius were set as parameters. Initially, static structural analysis was performed to check for the members under high stresses. The model was first optimized for front impact due to its severity in the ATV operation. The front optimized model was updated in the geometry and then the side impact optimization study was performed for system integration. The behaviour of combined design variables for front and side was studied to check for weight saving. Roll over optimization study was performed on the side optimized geometry. To account for the couple acting on the frame while negotiating bumps, the model was optimized for torsional loads. Model was then optimized for modal analysis such that the natural frequencies fall out of the engine idling frequency of 28 Hz. The iterative process of refinement of candidate points and updating the geometry were carried out in all the optimizations. Flowchart of the loops and the model development was followed for all the iterations. The above designed chassis is stiffer and stronger than the preliminary design. The final optimized mass after the system was 60.789 kg and maximum combined stress was 227.01 MPa. The trade-off analysis combined with topology optimization study can give us the better approximations of the possible optimized weight. The results hence concluded were based on conservative design approach. If the stress constraints are relaxed, further reduction in mass can be achieved.

Table of contents

List of figures

List of Tables

1.1 Rules and constraints:

According to SAE International 2016 Collegiate Design Series, Baja SAE® rules, under section B8.3.12 Roll Cage and Bracing Materials "(**B**) A steel shape with bending stiffness and bending strength exceeding that of circular steel tubing with an outside diameter of 25mm (1 in.) and a wall thickness of 3 mm (0.120 in.).The wall thickness must be at least 1.57 mm (0.062 in.) and the carbon content must be at least 0.18%, regardless of material or section size. The bending stiffness and bending strength must be calculated about a neutral axis that gives the minimum values."

Bending stiffness = $E * I$

Where,

E = Modulus of elasticity

I = Second moment of area for the structural cross section

Bending strength is given as follows:

$$M = \frac{Sy * I}{c}$$

Where,

Sy = Yield strength

c = Distance from neutral axis to extreme fiber.

1.2 Optimization Formulation:

Objective : Minimize Mass

$$Mass = \Sigma f(Ro_n, Ri_n)$$

Ro_n: $Outer\ Radius\ of\ the\ nth\ member$

Ri_n: $Inner\ Radius\ of\ the\ nth\ member$

Subject To :

i) Yield Strength= 460 MPa

ii) Factor of Safety >= 2

iii) Inner radius (Ri)

Lower Bound = 7 mm

Upper Bound = 12 mm

iv) Outer radius (Ro)

Lower Bound = 12.7 mm

Upper Bound = 16.7 mm

1.3 Assumptions:

1) The material considered is AISI 4130 chromoly steel with yield strength of 460 MPa.
2) Tubes in same plane have same cross section considering fabrication and assembly feasibility
3) Cross members were placed from the available reference model
4) Tubes symmetric about XZ plane have same cross section
5) Gross Vehicle Mass was assumed to be 280 kg
6) Since the front impact is instantaneous, the time of impact was assumed to be 0.15s

1.4 Meshing and Optimization Methods

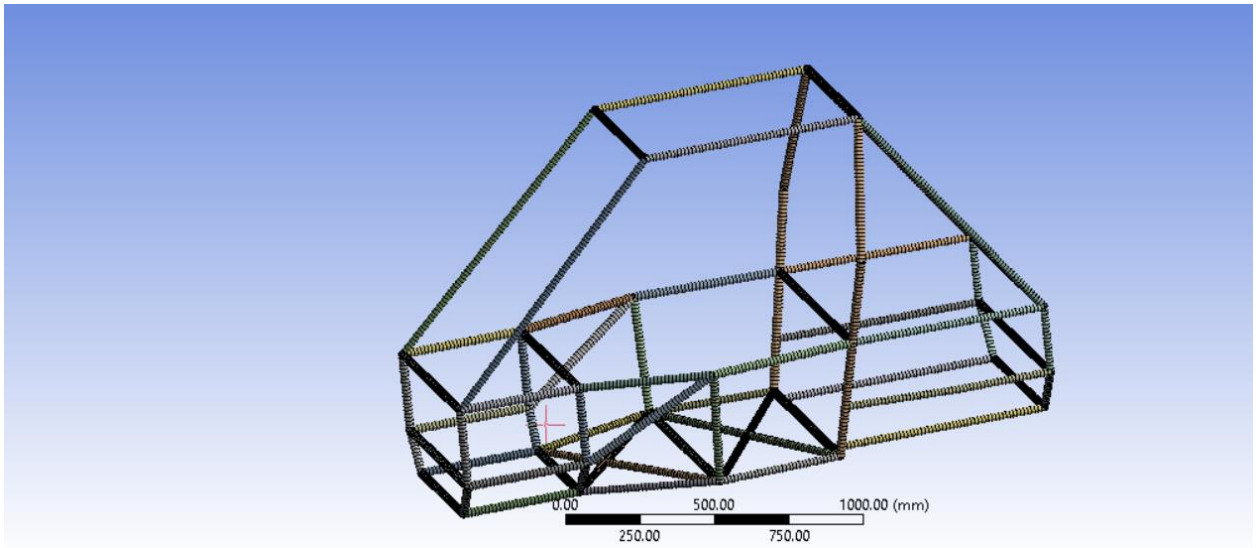

Fig 1.1: Meshed Model

Hex Dominant mesh was used using BEAM189 elements.

BEAM189 3-node 3-D beam

The BEAM189 element is suitable for analyzing slender to moderately stubby/thick beam structures. The element is based on Timoshenko beam theory which includes shear-deformation effects. The element provides options for unrestrained warping and restrained warping of cross-sections.

The element is a quadratic three-node beam element in 3-D. With default settings, six degrees of freedom occur at each node; these include translations in the x, y, and z directions and rotations about the x, y, and z directions. An optional seventh degree of freedom (warping magnitude) is available. The element is well-suited for linear, large rotation, and/or large-strain nonlinear applications.

Elasticity, plasticity, creep and other nonlinear material models are supported. A cross-section associated with this element type can be a built-up section referencing more than one material. Added mass, hydrodynamic added mass and loading, and buoyant loading are available.

Design of Experiment Methodology

The Latin Hypercube sampling method was used to create the design points in the DOE.

Latin hypercube sampling (LHS) is a statistical method for generating a sample of plausible collections of parameter values from a multidimensional distribution. The sampling method is often used to construct computer experiments. In the context of statistical sampling, a square grid containing sample positions is a Latin square if (and only if) there is only one sample in each row and each column. A Latin hypercube is the generalization of this concept to an arbitrary number of dimensions, whereby each sample is the only one in each axis aligned hyperplane containing it.

When sampling a function of N variables, the range of each variable is divided into M equally probable intervals. M sample points are then placed to satisfy the Latin hypercube requirements; note that this forces the number of divisions, M, to be equal for each variable. Also note that this sampling scheme does not require more samples for more dimensions (variables); this independence is one of the main advantages of this sampling scheme. Another advantage is that random samples can be taken one at a time, remembering which samples were taken so far. [5]

Response Surface Optimization Methodology

Since the objective function of mass was continuously differentiable the NLPQL methodology was utilized to perform the response surface opitmization.

Non-Linear Programming by Quadratic Lagrangian (NLPQL) is a sequential quadratic programming (SQP) method which solves problems with smooth continuously differentiable objective function and constraints. The algorithm uses a quadratic approximation of the Lagrangian function and a linearization of the constraints. To generate a search direction a quadratic sub-problem is formulated and solved. The line search can be performed with respect to two alternative merit functions, and the Hessian approximation is updated by a modified BFGS formula. [6]

1.5 Model

Modelling of the SAE BAJA Chassis

The Chassis was initially modelled in CATIA as a surface model considering the minimum design requirements following the SAE BAJA rules.

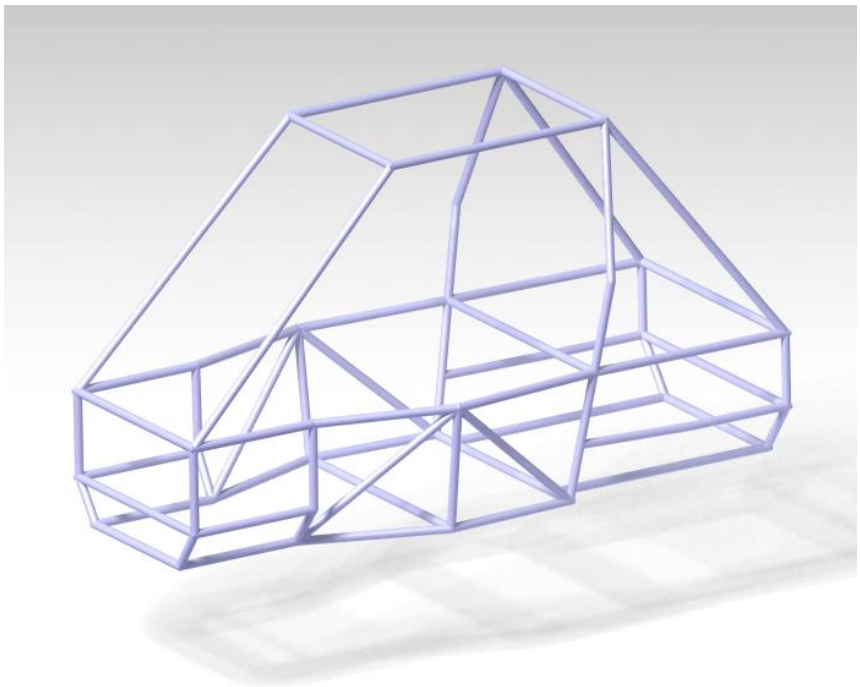

Fig 1.2: CATIA model

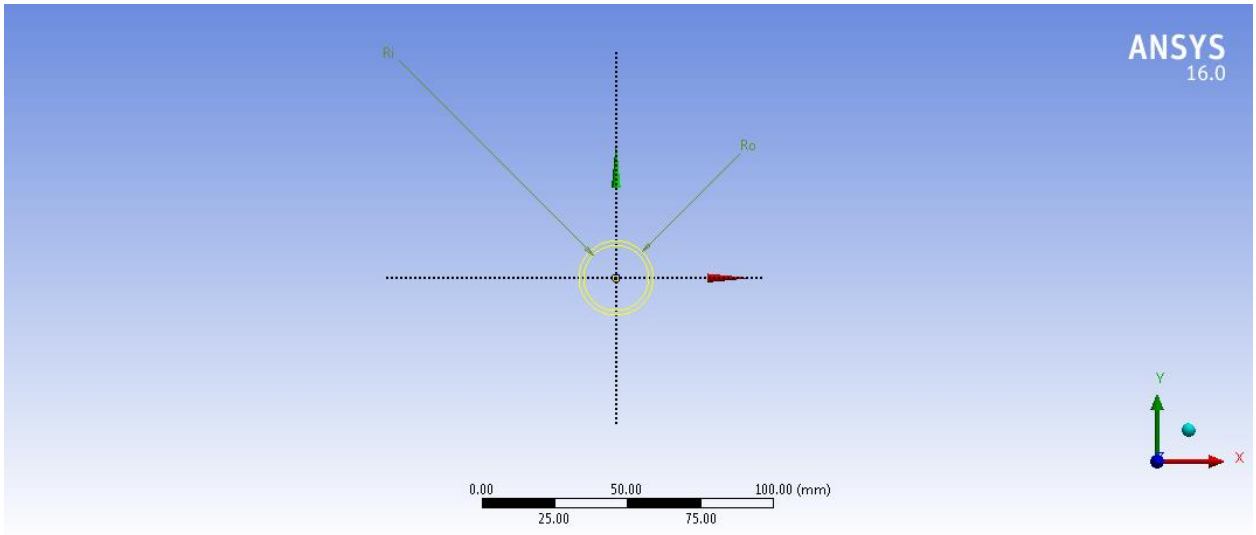

Fig 1.3: Cross section having dimensions Ro and Ri

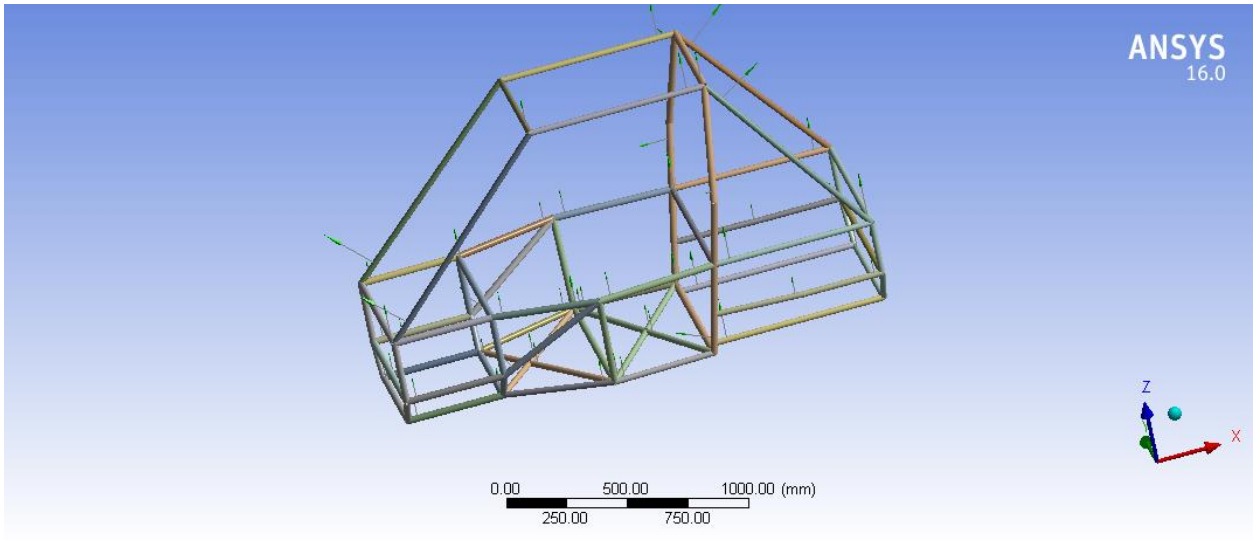

Fig 1.4: ANSYS Design Modeller

Since we couldn't define the parameters in the model designed in CATIA, we had to do the modelling again in ANSYS. The points of intersection of members were extracted into a point file. This point file was imported into ANSYS Design Modeler and the points were connected by lines to generate line bodies. Each line body is assigned with a cross section and the Outer radius and Inner radius were given the initial values of 12.7mm and 11.13mm respectively. The Outer radius and Inner radius were made as parameters in each cross section. Finally all the line bodies are made into a single part. The line bodies act as beams.

Material properties

From a large selection of alloys of steel, AISI 4130 Chromoly steel was chosen to be the suitable material because of its less weight per meter length when compared to AISI 1018.

AISI 4130 Chromoloy steel was created as a new material in the Engineering data in ANSYS. Isotropic Elasticity property was used to define the properties of the material such as Young's modulus, poisson's ratio, bulk and shear modulus. The material properties assigned are as follows:-

Density g/cm^3	Young's Modulus MPa	Poisson's Ratio	Bulk Modulus MPa	Shear Modulus MPa
7.85	2.e+005	0.285	1.5504e+005	77821

Table 1.1: Material Properties

2. The Frontal impact Analysis:

The frame is made of steel members. The steel members are usually connected in such a way that the members undergo pure compression or tension. The integrity of the frame is such that on impact the roll cage is prevented from failure. The frame forms the major part of the cockpit. The maximum impact force that a car experiences can be that from frontal impact. Hence the cockpit is structurally an important part for the driver.

The Load required for frontal impact is obtained by creating a scenario where the car is moving at a top speed of 65 kmph undergoing a head on collision with rigid body. The mass of the car including the driver is assumed to be 280kg. The various loads are calculated using basic mechanics

Calculations

Gross Mass of the car, $m = 280\ kg$

Velocity of the car, $\mathrm{v} = 65\ \mathrm{kmph} = 18\frac{\mathrm{m}}{\mathrm{s}}\ \ (Max\ Velocity)$

Time of impact, $t = 0.15\ s\ (Time\ from\ top\ speed\ to\ full\ stop)$

Acceleration, $a = \frac{v_f - v_i}{t} = \frac{0-18}{0.15} = 120\ m/s^2$

Force, $F = m * a = 280 * 120 = 33.33kN$

The above calculated force is approximately equal to a force of 12g. The deceleration is taken as a worst case scenario for human-body. This complies with the maximum limit of deceleration a human body can withstand before passing out i.e 9g.

2.1 Loading Conditions

The geometry of the frame is modelled on ANSYS design modeller.

A uniformly distributed load of 33.33 kN in the positive x direction is applied uniformly on the 7 members in the front most y-z plane of the frame. The displacement of 4 points on the fire-wall, right behind the driver is constrained in all degrees of freedom: Translation in X-Y-Z and rotation about X-Y-Z.

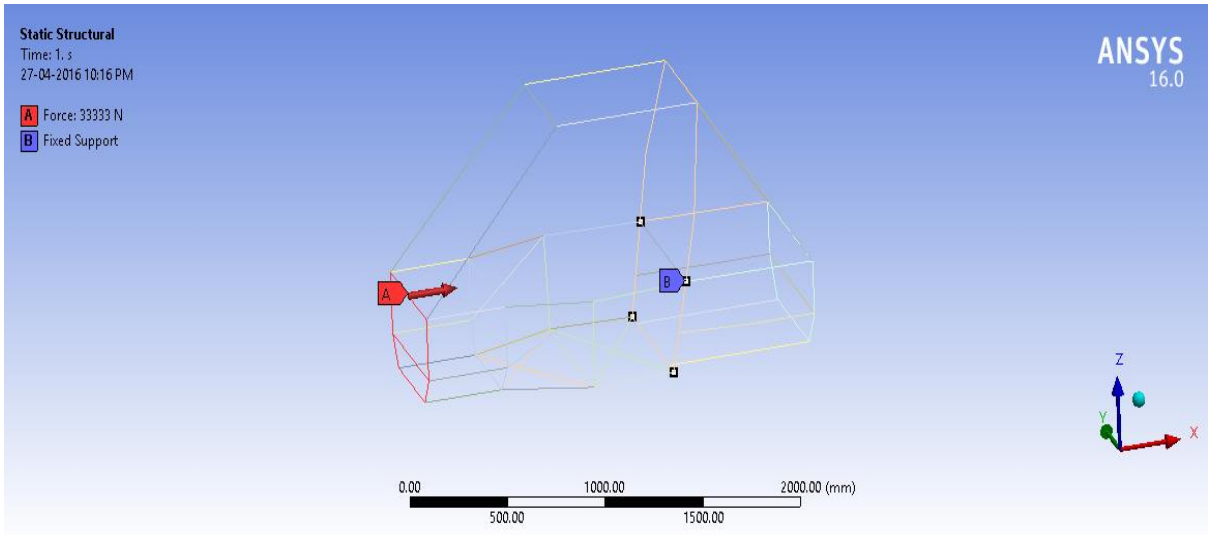

Fig 2.1: Loading and Boundary Conditions for the frontal impact Loading

2.2 Static Structural Analysis:

The model is made with minimum requirements in accordance with SAE rule book i.e. 1 inch outer diameter and 1.57mm thickness. On applying the load to the model a good 10 members have stress value more than 230Mpa. Inner Radius and Outer Radius of these members were selected as parameters. A total of 20 parameters were used for Design of experiments. A Method of Latin Hyper Cube Sampling was selected for creating the design points. A total of 534 Design points were created for Design Optimization.

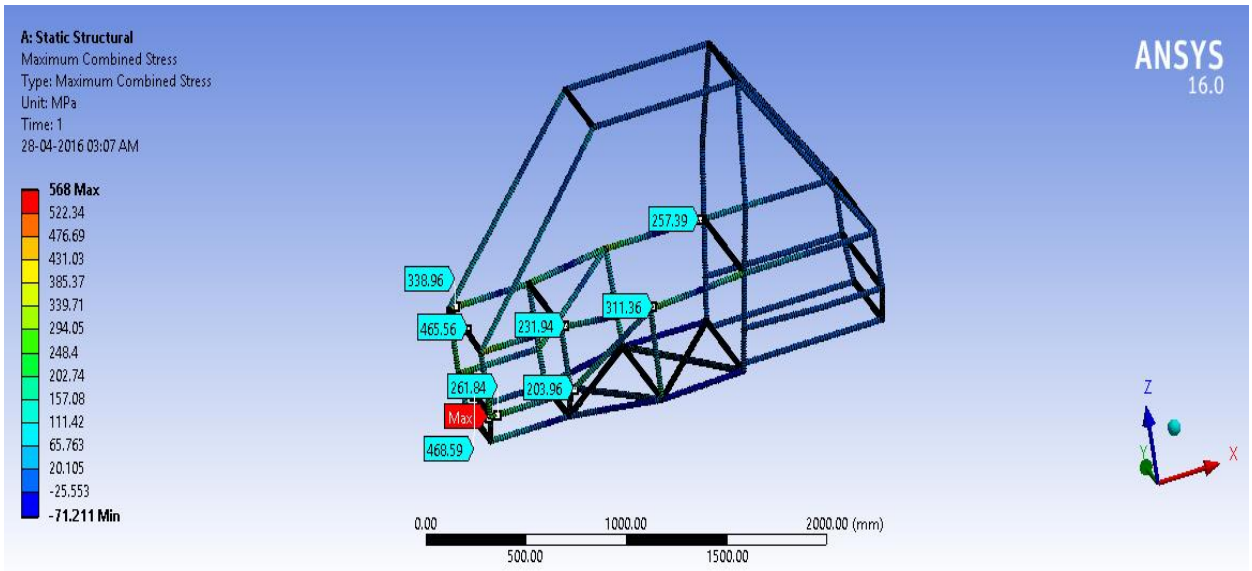

Fig 2.2: Stress induced in the frame in frontal impact loading

2.3 Optimization Results:

NLPQL optimization method is followed for optimization. The following were the candidate points chosen and the corresponding mass and stress are 53.88 kg and 188.98 MPa respectively provided by the response surface:

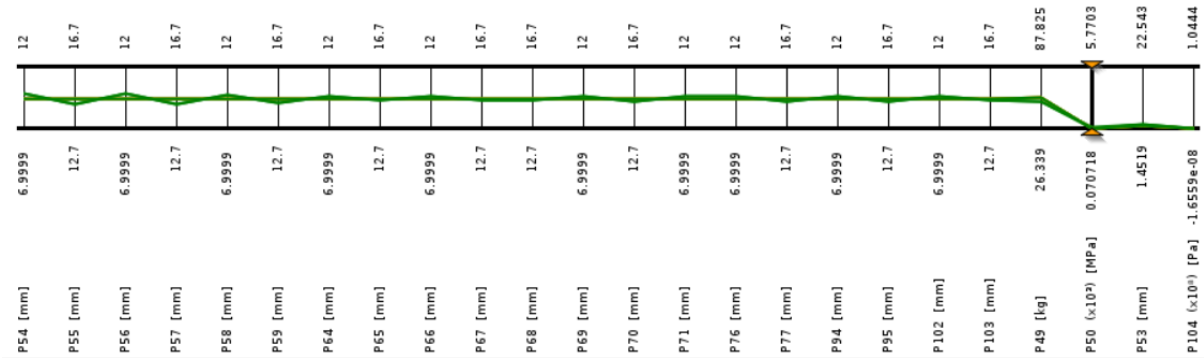

Fig 2.3: Plot of Candidate points and the corresponding parameter values

Parameter Ri, Ro - CircularTube#	Ri, mm	Ro, mm
P54, P55 - CircularTube1	9.903788263	14.30017032
P56, P57 - CircularTube2	9.90588924	14.29800747
P58, P59 - CircularTube3	9.825920845	14.37716541
P64, P65 - CircularTube6	9.669965749	14.53161714
P66, P67 - CircularTube7	9.670029443	14.53164087
P69, P68 - CircularTube8	9.666101054	14.53578958
P70, P71 - CircularTube9	9.683794126	14.51800322
P76, P77 - CircularTube12	9.705170176	14.49687747
P94, P95 - CircularTube21	9.714685724	14.48744424
P102, P103 - CircularTube25	9.633941816	14.56737746
Mass, kg	53.88002227	
Maximum Stress, MPa	188.9801829	

Table 2.1: Optimized cross sectional dimensions

The above values of inner and outer radius are the candidate points. As seen from the graph the value lies between the bounds and show that the bounds chosen are in fact valid.

The graphs below show the convergence of mass and stress. It can be seen from the graph that minimum mass is 53.88 kg and the corresponding maximum stress is 188.98 MPa. The algorithm further tries to reduce the mass by converging the solution towards a maximum stress of 230 MPa. This candidate point is further updated on 5

refinement loops. When the design points at the end of the refinement loops are updated in static structural analysis, the maximum stress obtained is 257MPa. The error obtained is a result of limited number of design points updated in Design of Experiments. Further with more design points for the 20 parameters a solution closer to the optimum value can be obtained. Hence the above solution of 53.88 kg is the optimum mass.

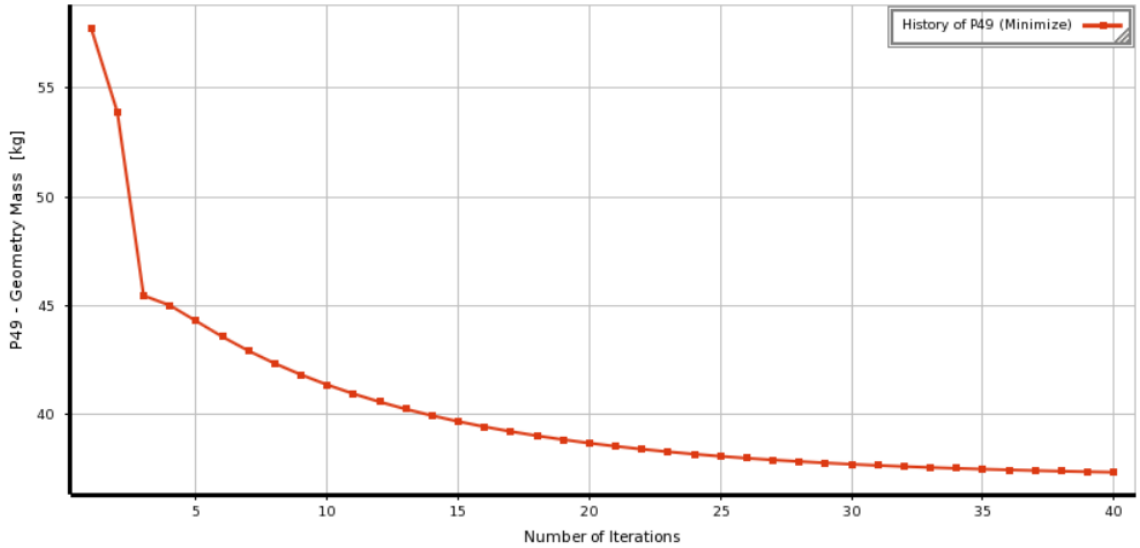

Fig 2.4: Mass Convergence

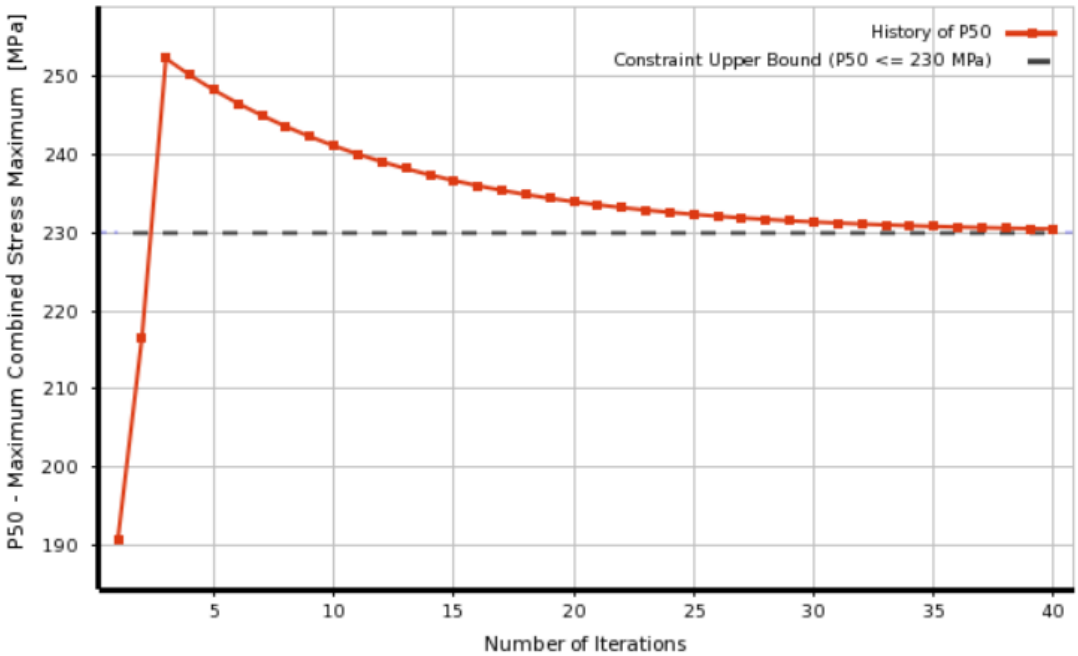

Fig 2.5: Stress Convergence

3. The Side Impact Analysis

The side impact loading analysis of the chassis of the Baja car is carried out to ensure the safety of the driver for any collisions on the side with another vehicle. In the side impact test the chassis is aligned sideways relative to the oncoming vehicle. In reality though, some of the impact energy will be taken up by the suspensions and the wheels, but we do not consider that in this simulation to make it a worst case scenario of the impact.

3.1 Model

The optimized model of the chassis for the front impact loading condition is imported to be analysed for the side impact loading condition.

3.2 Side Impact Loading Conditions

The load required for the side impact is obtained by creating a scenario where one car is moving towards the other's side at a top speed of 65 kmph. The mass of the car including the driver is assumed to be 280kg. The loads to be applied to the chassis are calculated as follows [3]:

Calculations:

Gross Mass of the car, $m = 280\ kg$

Velocity of the car, $\mathrm{v} = 65\ \mathrm{kmph} \approx 17.86 \frac{\mathrm{m}}{\mathrm{s}}\ \ (Max\ Velocity)$

Time of impact, $t = 0.30\ s\ (Time\ from\ top\ speed\ to\ full\ stop)$

Acceleration, $a = \frac{v_f - v_i}{t} = \frac{0-17.86}{0.30} \approx 59.53\ m/s^2$

Force, $F = m * a = 280 * 59.53 \approx 16.66kN$

A uniformly distributed load of 16.66 kN in the positive y-direction is applied on carefully selected eight members. These members are selected by choosing those members lying in the x-z plane at the most negative position in the y-direction of the frame.

The 6 points at the opposite extreme (lying in the x-z plane at the most positive position in the y-direction) of the frame are constrained in all the six degrees of freedom (3 DOF translation and 3 DOF rotation). The loading is done so to consider the worst case scenario of side impact loading.

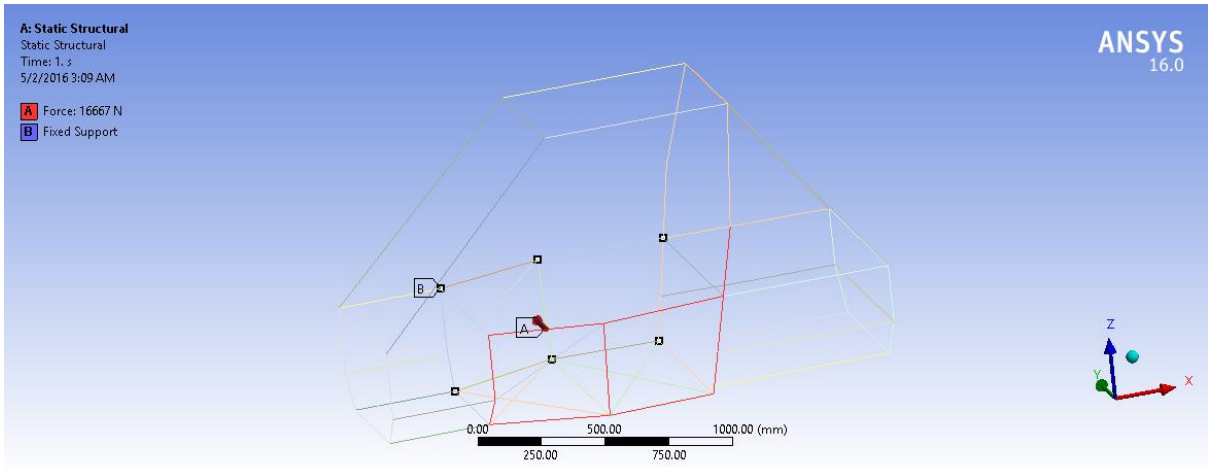

Fig 3.1: Loading and Boundary Condition for Side Impact Loading

Application of the calculated load of 16.66kN on the specified members of the chassis resulted in the following:-

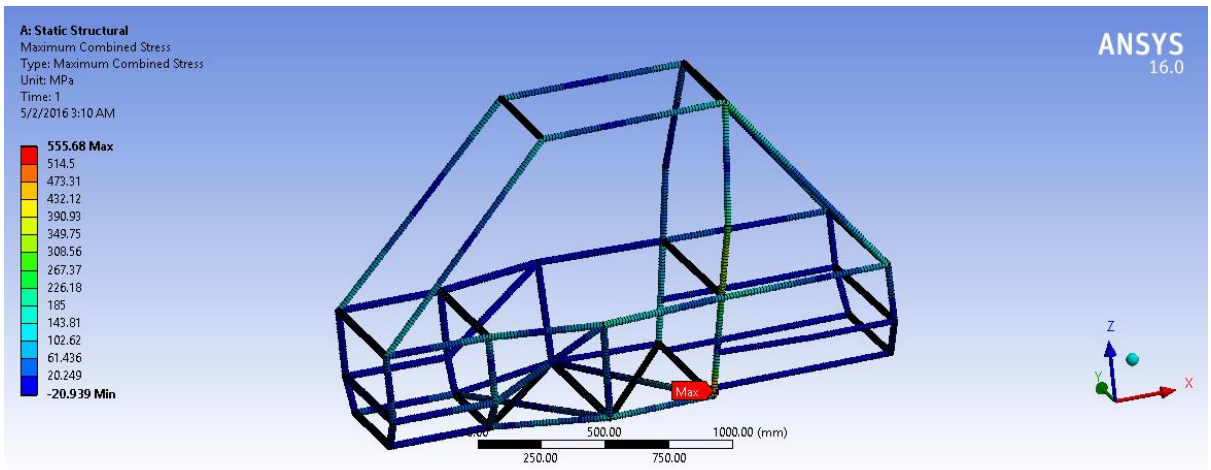

Fig 3.2: Initial stresses induced in the chassis due to side impact loading

It was seen that this loading of the model resulted in 2 members of the frame having the maximum combined stress value to be greater than the allowable stress limit of 230Mpa. These two members are the firewall and the cross member under the driver closest to the firewall.

3.3 Optimization

Both the inner and outer radii of the two members were set as parameters resulting in a total of 4 parameters in this subsystem of the study. The Latin Hyper Cube Sampling methodology was employed for creating the design points required for the Design of Experiments study which generated a total of 25 design points corresponding to the 4 parameters within the specified ranges.

The determination of the maximum combined stress values and the weight of the chassis corresponding to each of the 25 design points as part of the DOE was followed by the generation of the Response Surface to obtain the optimal response.

Non-Linear Programming by Quadratic Lagrangian (NLPQL) was the optimization method followed for the optimization study. The allowable convergence limit was set at 0.0001% and the maximum number of iterations was set at 40. The objective function minimization of the mass along with the allowable stress constraint was input and also the parameter relationship specifying the minimum thickness of each member.

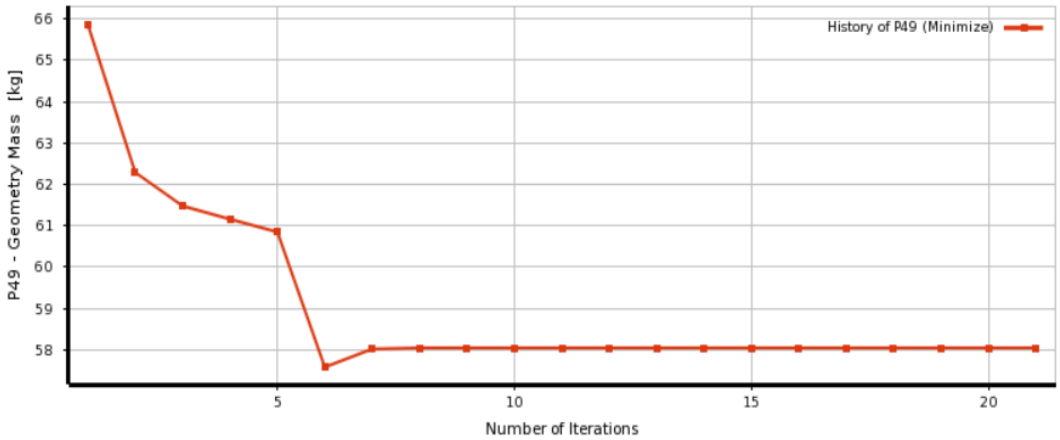

Fig 3.3: Convergence of the mass of the chassis

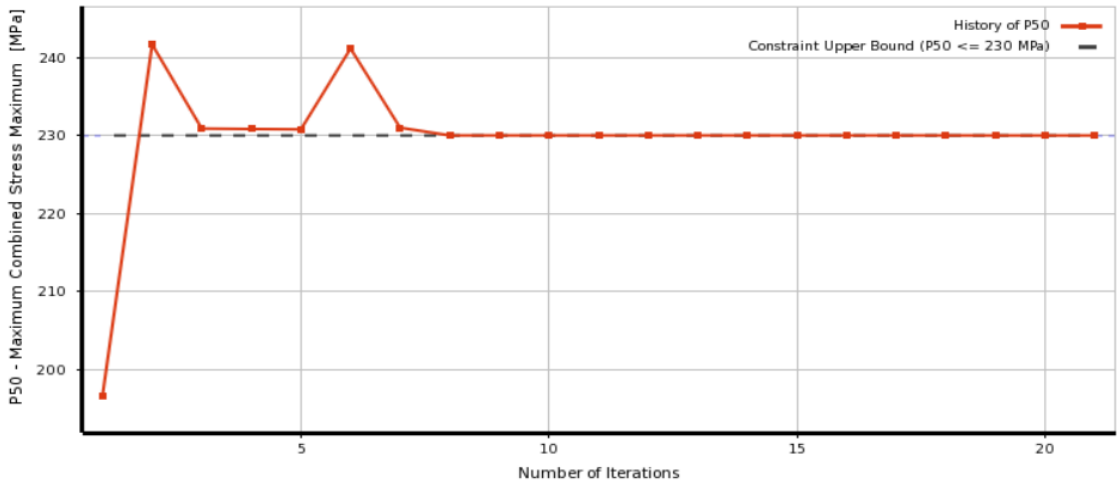

Fig 3.4: Convergence of the Maximum combined stress in the chassis

The two plots above show the convergence of the mass and the maximum combined stress values as the number of iterations are increased, where the convergence is

achieved at the 21st iteration requiring 92 evaluations generating two candidate points.

Two candidate points were generated:-

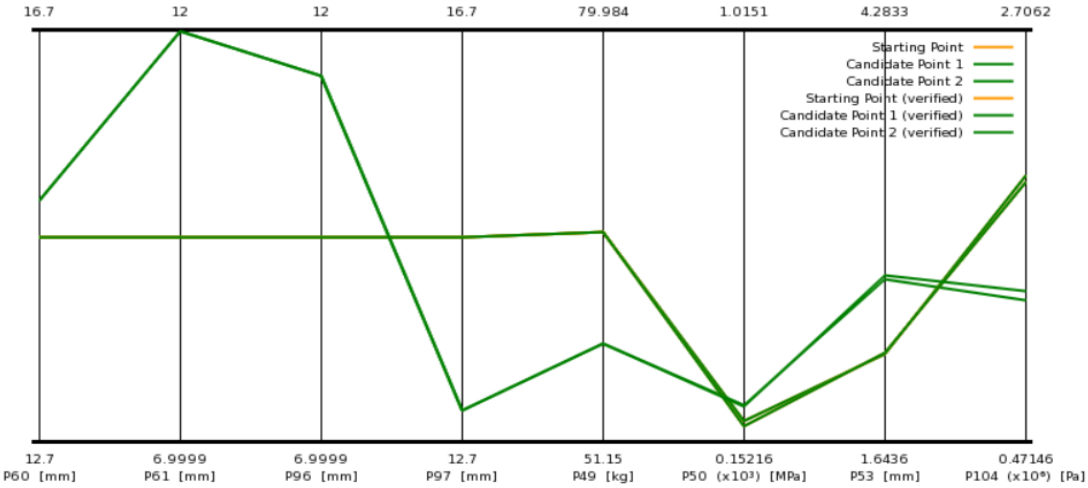

Fig 3.5: Plot of the parameters of the study corresponding to the two candidates

The best candidate point chosen resulted in the optimized values as follows:-

	CT_4-Ro	CT_4-Ri	CT_22-Ri	CT_22-Ro	Mass	Stress
Initial	12.7	11.13	11.13	12.7	53.88	555.68
Optimized	15.05	12	11.447	13.017	58.048	227.76

Table 3.1: Comparison between Initial model and Optimized model

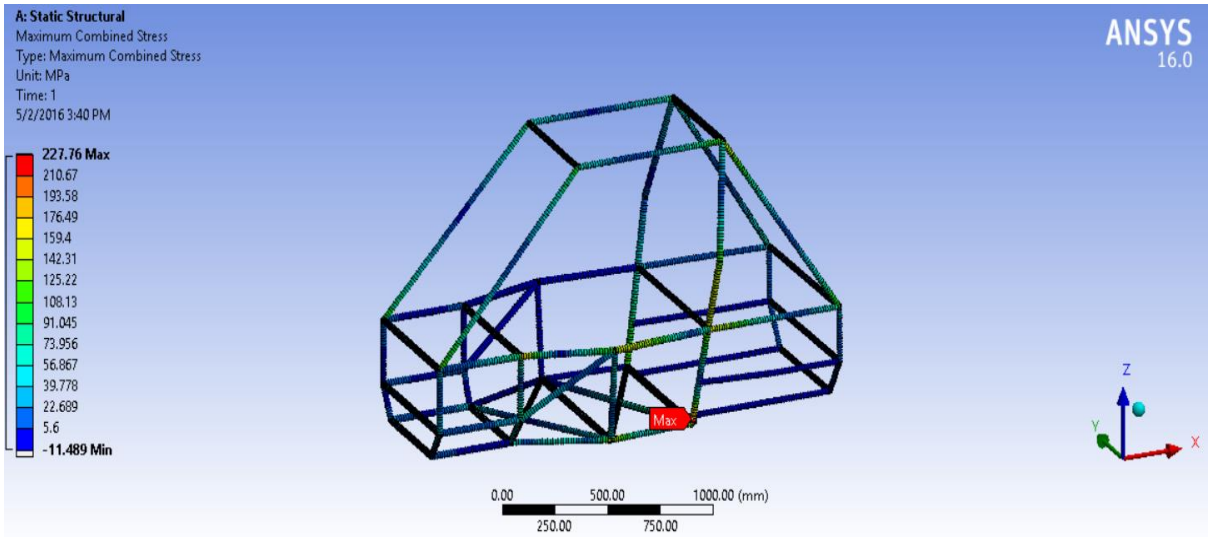

Fig 3.6: Side Impact Loading for the optimized model

The solution from the response surface for the above values of input cross sectional dimensions was a weight of 58.048kg and a maximum combined stress of 230 MPa, which has a 0.98% error from the verified value for the same input cross sectional dimensions. Further iterative refinement of the response surface will reduce the error closer to zero resulting in an accurate response surface approximation and correspondingly optimized cross sectional dimensions for the side impact loading.

4. The Roll-over Impact

The SAE Baja car is designed for off-road rough terrain. The chances of the car rolling over is high when it encounters hills or valleys. Therefore the car has to be designed taking care of the safety of the driver, addressing all the possible situations of danger. The Roll-over Impact analysis is performed to design the roll-cage for maximum safety during the roll-over incidents.

4.1 Model

The optimized parameters obtained from front impact and side impact analysis are used as inputs for the roll-over impact loading analysis.

4.2 Roll-Over Impact Loading Conditions

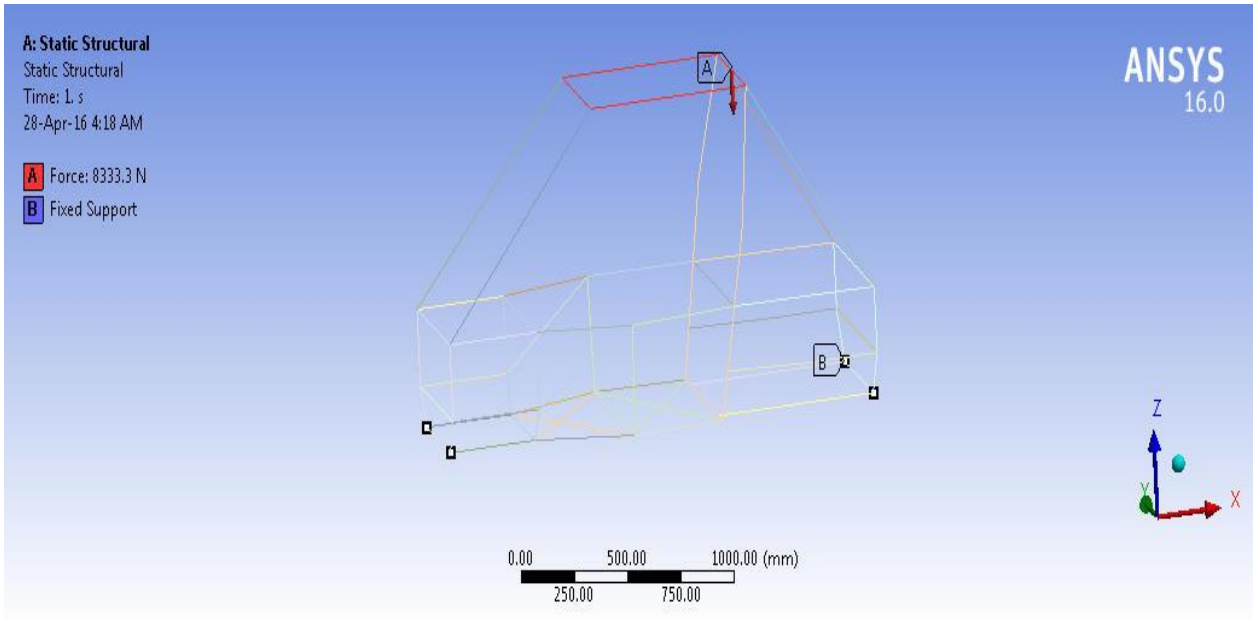

Fig 4.1: Loading and Boundary condition for Roll-over impact loading

The load required for the roll-over impact loading analysis is obtained by using 25% of the load used for the frontal impact analysis as follows[2]:

Calculations:

Force, $F = 0.25 * Frontal\ impact\ load = 0.25 * 16.66kN \approx 8.33\text{kN}$

The uniformly distributed load of 8.33 kN is applied in the negative Z-direction uniformly on the top 4 members of the frame.

The frame is constrained along the 4 vertices at the bottom on the XY-plane in all the six degrees of freedom (3 DOF translation and 3 DOF rotation) by the use of fixed supports. This setup virtually simulates the roll-over impact loading condition encountered in a real world situation on the track.

Applying the calculated load of 8.33kN on the specified members of the chassis resulted in the following:-

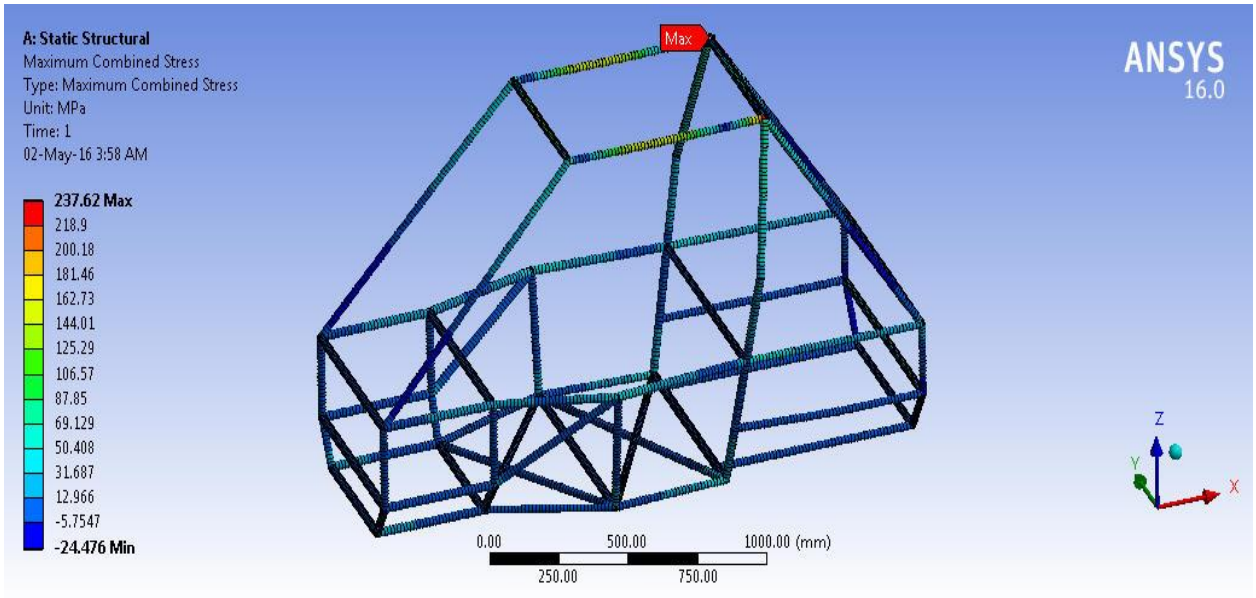

Fig 4.2: Initial stresses induced in the chassis due to roll-over impact loading

It was found that the stresses induced in the two roll-hoops was 237.62 MPa which was higher than the allowable stress limit. The chassis therefore had to be optimized to have stresses within this loading condition. The inner and outer radii of the roll-hoops were selected as the parameters for the optimization study.

4.3 Optimization

The two parameters selected above were used for the Design of experiments. The Latin Hyper Cube Sampling method was selected for creating the design points, which resulted in 10 Design points being created during the DOE process.

The Response Surface to obtain the optimal response was created based on the input from the DOE using the Standard response surface- 2nd order polynomial type method.

A response point is chosen by default by the software. This response point is used as the starting point for the optimization process. The optimization setup of the roll-over impact analysis is similar to front and side impact analysis, where minimization of the mass is the objective of the study and stress limit is the constraint. The parameter relationship governing the minimum thickness cross section criteria was applied during the response surface optimization step. The Nonlinear Programming by Quadratic Lagrangian (NLPQL) method with allowable convergence of 0.0001% and a maximum of 40 iterations is used for the optimization process.

This response surface Optimization process converged in 3 iterations correspondingly employing 8 evaluations providing the converged results of the mass of the chassis and the maximum combined stress induced in the chassis.

The optimization study generated 3 candidate points, out of which the best candidate point was selected. Comparing the Maximum combined stress values and mass of the chassis of this candidate point from the Response Surface and that from Static Structural analysis gave an error of 22.71% which suggested more scope of optimization towards getting better results. Therefore, the best candidate point from the obtained result was chosen again as a refinement point to get a better approximation of the response surface for the current study.

The three candidate points obtained after refinement of the response surface are explained below:-

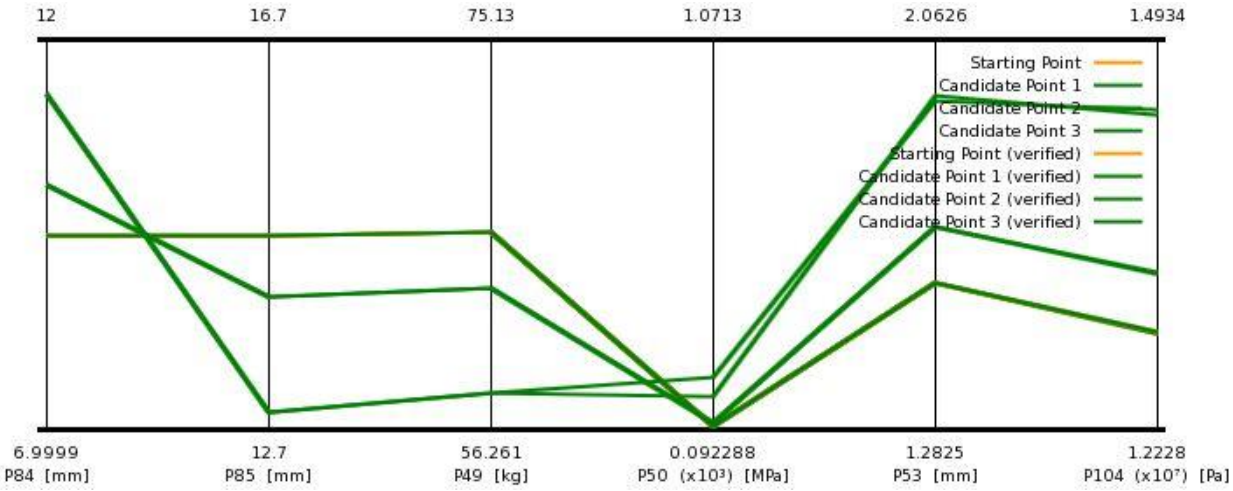

Fig 4.3: Plot of the three candidate points with their corresponding parameters

The above graph shows placement of the candidate points between the specified bounds of variation. We see that all the candidate points are within the bounds and are giving valid results of optimization.

The following was the candidate points chosen:-

Parameter Ri, Ro - CircularTube#	Ri, mm	Ro, mm	Mass(kg)	Max Combined Stress(MPa)
P84 – P85 CircularTube16_Plane	11.3208	12.8908	58.101	228.37

Table 4.1: Optimized cross sectional dimensions

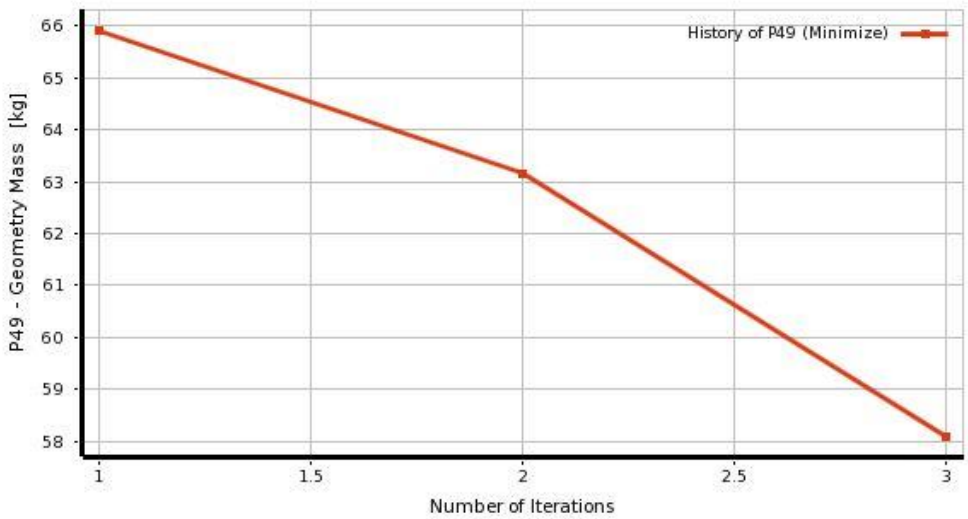

Fig 4.4: Mass Convergence

The above graph represents the mass convergence with increasing number of iterations of optimization study. The mass converged to 58.101 kg. We see that the mass is minimized by the decreasing value of mass with the increase in number of iterations.

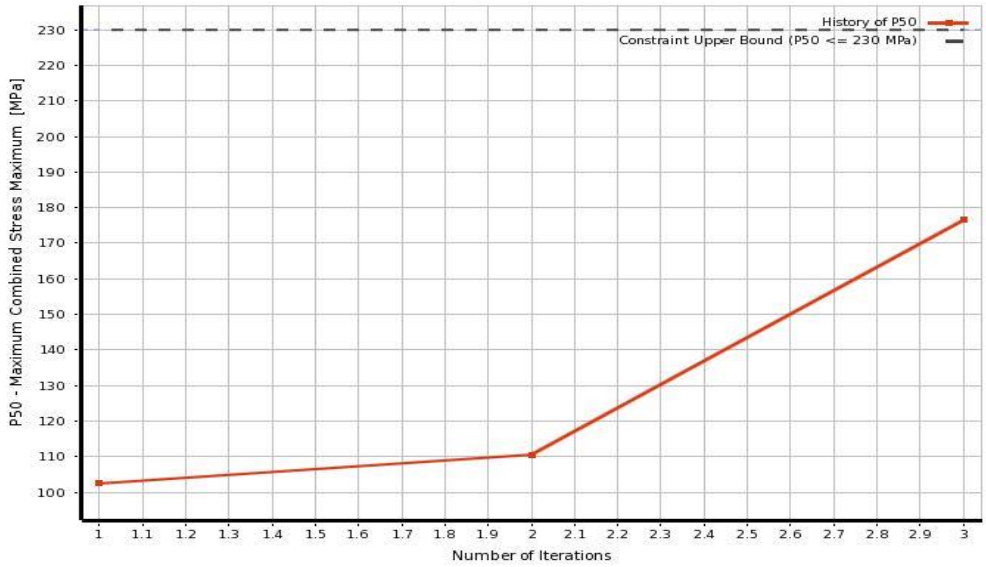

Fig 4.5: Stress Convergence

The above graph shows the stress convergence with the increasing number of iterations of the optimization study. We see that the stress converges to 228.37 MPa for the optimized value of mass.

5. The Modal Analysis

Our objective here was to build a dynamically stable chassis to withstand all kind of terrain during its mobility. The BAJA car, being an off-road racing vehicle experiences severe uneven loading. We had to optimize the frame so that it can withstand all static and dynamic loads as well as being light in weight.

When the natural frequency of vibration a frame equals the excitation frequency of forced vibration, there occurs a phenomena of resonance which causes severe deflections to the structure. These excessive vibrations and resonance causes lot of failure to the structure/frame due to the harsh conditions in which the vehicle is driven. Here, we are finding the natural frequency of the frame under its self-weight. This frequency should be well above the range of any excitation frequency caused by external factors. Generally, the natural frequency of the model can be calculated using the following equation:

$$W_n = \sqrt{(\frac{k}{m})}$$

where k is the mass and m stands for stiffness.

The major contributing factor for the forced vibration is the engine, which is mounted on the back of the vehicle. The vibrating frequency of the engine is within the range of 15Hz-25Hz as in most cases of a single cylinder 310cc, 10HP engine. Therefore, we have to model the chassis such that its natural frequency at various mode shapes is well above this range. By obtaining frequencies as mentioned above we will be avoiding resonance and thus creating a dynamically stable model.

5.1 Mathematical Model

The equations of motion of a multi DOF system is generally automatically created by FEM software that we are using here, but for analytical purposes it can be derived using the Lagrange's equation as shown below [1]:

$$\frac{d}{dt}\left(\frac{\partial T}{\partial \dot{q}_i}\right) - \frac{\partial T}{\partial q_i} + \frac{\partial V}{\partial q_i} = Q_i$$

where T is the Kinetic energy, V is the potential energy and Q is the generalized degrees of freedom.

In the modal analysis, the dissipative (non-conservative) forces are zero. The system is taken to be conservative and on the RHS of the equation we have vector of zeros as shown below:

$$[m].\ddot{\vec{q}} + [k].\vec{q} = \vec{0}$$

The above equation describes the undamped free vibration of the chassis that we are considering. The characteristic determinant of the corresponding eigenvalue problem is given by Equation:

$$\Delta = \left[\alpha[I] - [D]\right] = 0$$

Here, [D] is the dynamic matrix of the system, α is the eigenvalue vector and the identity matrix. Once the eigenvalues are known, the mode shapes or eigenvectors for each mode "i" can be calculated using the equation below:

$$\left[\alpha_i[I] - [D]\right].\vec{Q}_i = \vec{0}$$

5.2 Boundary Conditions:

The chassis frame is fixed at the suspension points in order to know about the various mode shapes of the upper body structure. Fixed Supports are given at suspension points since the wheels and suspension are mounted to the axle thereby restricting the DOF of lower base to zero.

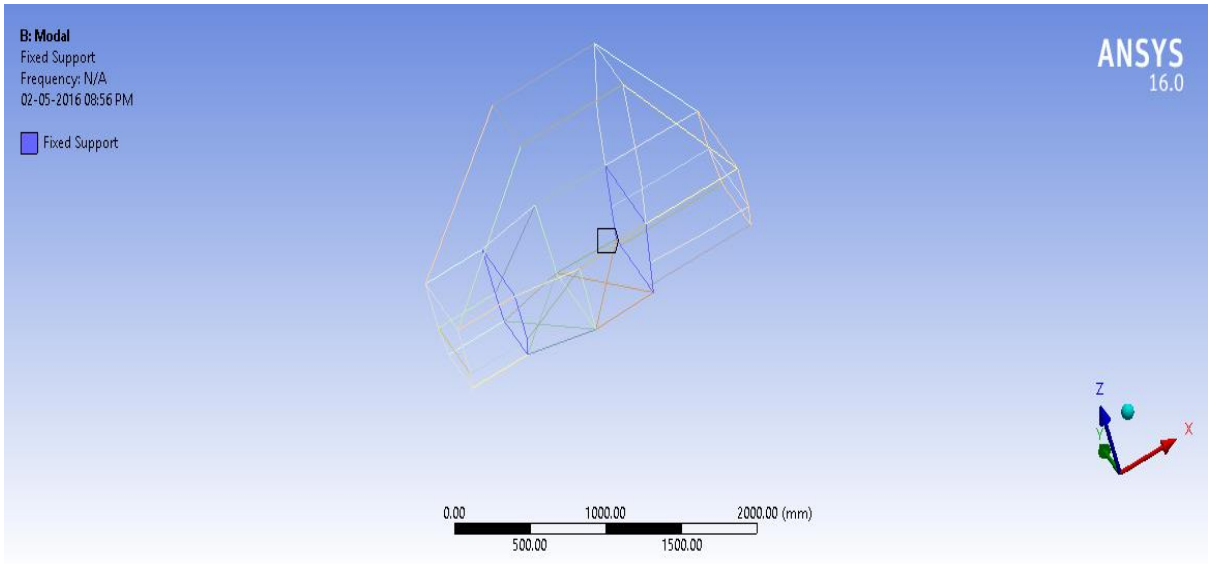

Fig 5.1: Boundary condition

5.3 Results:

*** FREQUENCIES FROM BLOCK LANCZOS ITERATION ***

MODE	FREQUENCY (HERTZ)
1	31.81872961118
2	37.08704466376
3	41.30435112778
4	54.03776006546
5	67.07072229914
6	89.19889336394

Fig 5.2: List of frequencies w.r.t mode shapes

The mode shapes that were obtained from the analysis are as follows:

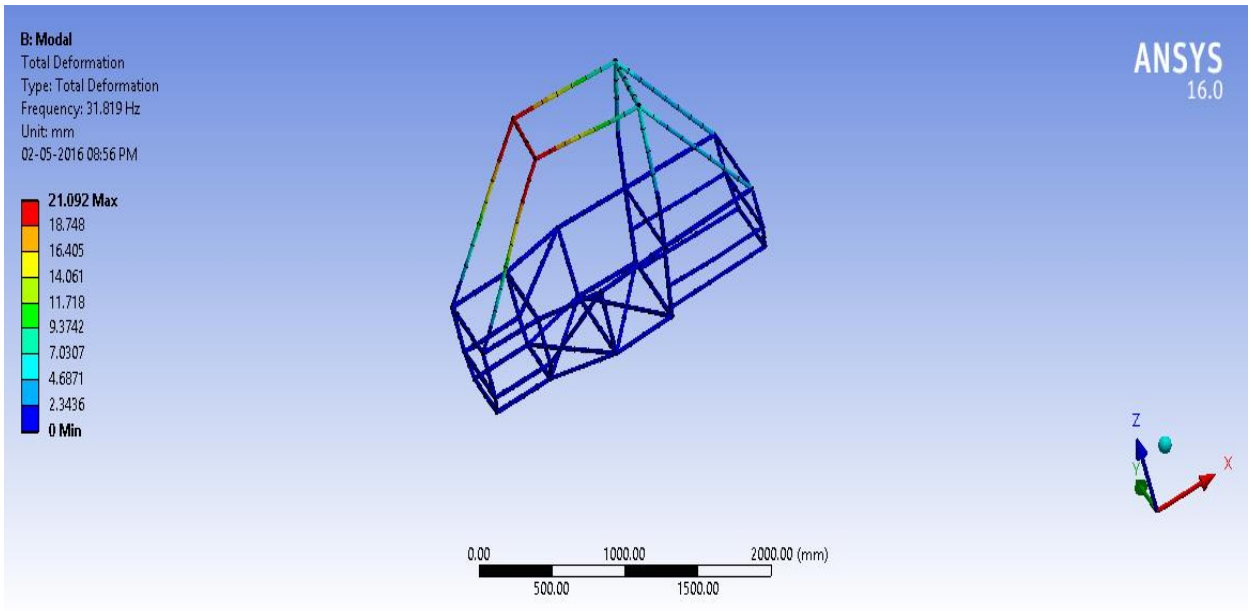

Fig 5.3: First mode shape of vibration

The First mode shape explains about the longitudinal vibrations caused on the upper part of the structure with a natural frequency of 31.819 Hz which is lowest natural frequency.

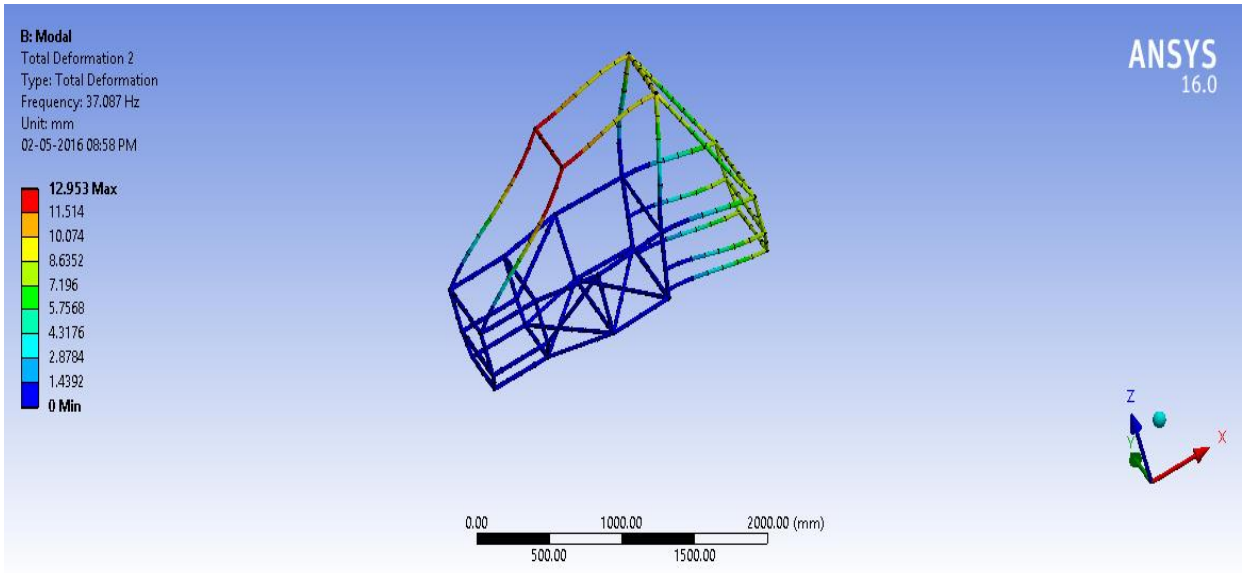

Fig 5.4: Second mode shape of vibration

In this mode shape also the upper part of the frame experiences longitudinal vibrations with a frequency of 37.087 Hz.

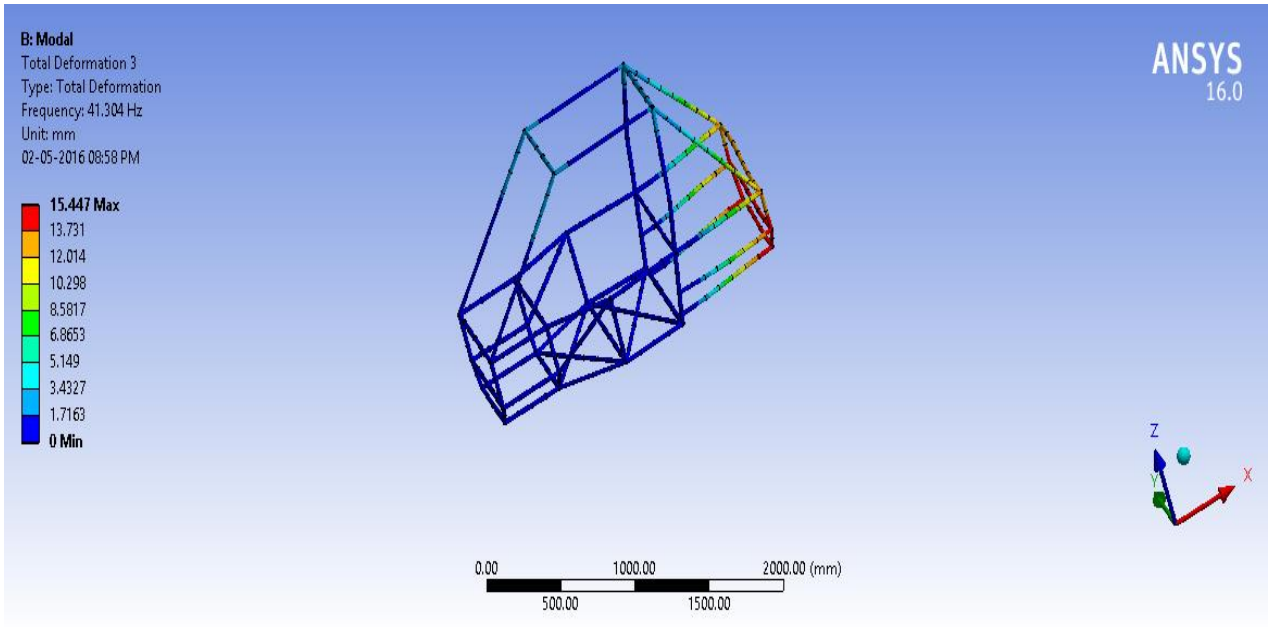

Fig 5.5: Third mode shape of vibration

In this mode shape, the rear part of the chassis vibrates with a natural frequency of 41.304 Hz.

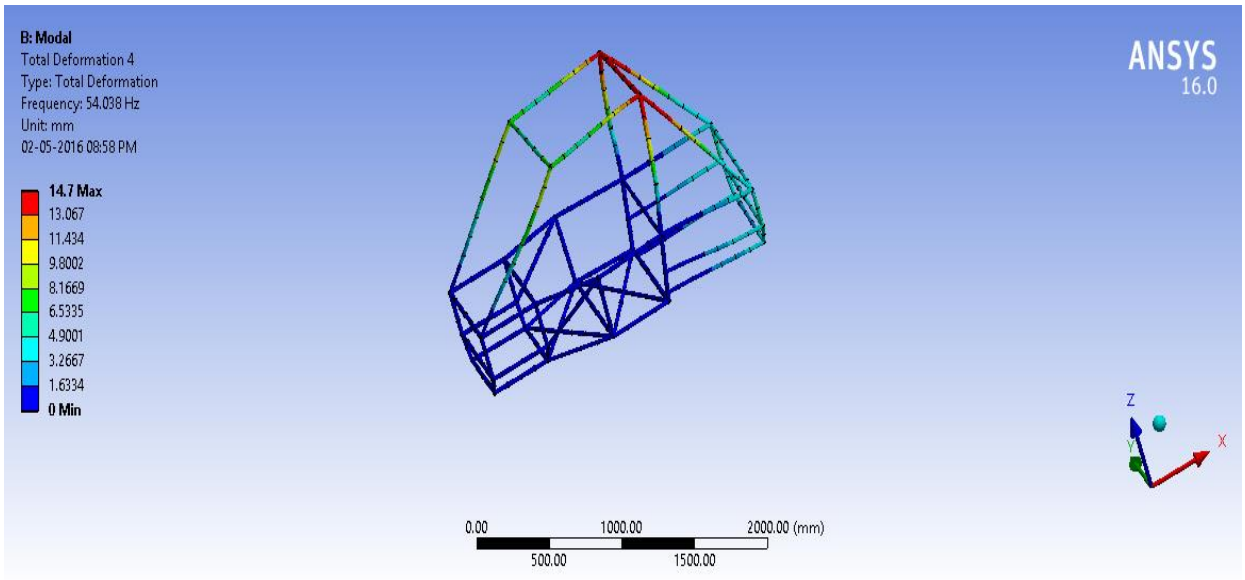

Fig 5.6: Fourth mode shape of vibration

In this mode shape, the upper frame, firewall and the beams connecting the rear end vibrate with a frequency of 54.038 Hz

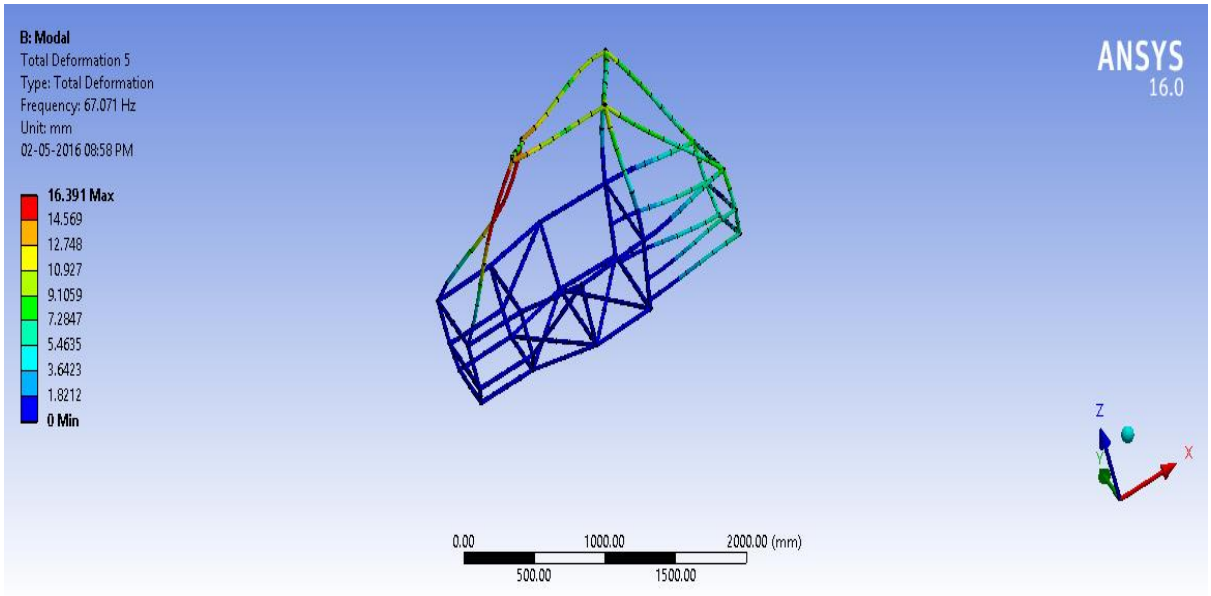

Fig 5.7: Fifth mode shape of vibration

In this mode shape the entire upper frame and beams connecting them vibrate with a natural frequency of 67.071 Hz.

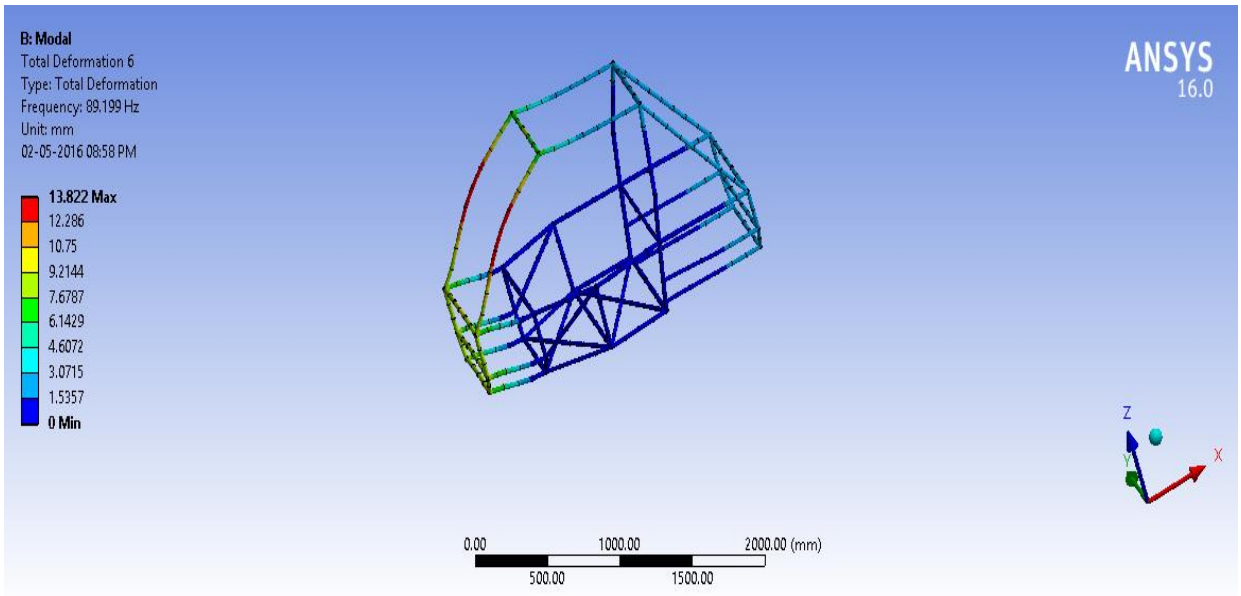

Fig 5.8: Sixth mode shape of vibration

In the sixth mode shape the frontal structure vibrates with a frequency of 89.199 Hz and this is the highest frequency experienced by this model under self-weight and gravity.

The frequency modes that determine its dynamic characteristics are in the range of 31Hz- 89Hz and less than 100Hz frequency mark.

Once the accessories like seats, engine, suspensions and steering systems are added to the vehicle the mass of the vehicle increases thereby increasing the natural frequency. Thus we find that the natural frequency range is well above the excitation frequency range.

This implies that the model is completely stable and safe for uneven loading conditions.

6. Torsional Loading Analysis:

The frame should be stiff enough to sustain dynamic suspension loads. When the vehicle is negotiating the bump there might be a case of alternating bumps on left and right wheels. Considering the left wheel is having the upward travel (jounce) and the right wheel is having the downward travel (rebound) the spring forces will act in the opposite direction composing a couple on front of the vehicle. This couple tries to produce the torsional stress in the frame. For the worst case scenario the diagonally opposite wheels are having the opposite wheel travel i.e. front right wheel is having the vertically upward travel and at same time rear left wheel is having the vertically downward travel producing a couple diagonally. This couple is responsible for the torsional stresses in the vehicle.

Torsional Stiffness of SAE Baja car has to be greater than 3.5 kNm/degree. Hence the optimization problem becomes:

OPTIMIZATION FORMULATION:

Objective : Minimize Mass
Mass = *f (Ro, Ri)*
Subject To *:*
i) Torsional Stiffness > 3.5 KNm/degree *(SAE Requirement)*

6.1 VALIDATION:

To check whether the optimize design satisfies the torsional strength requirement, analytical study was performed. The maximum deformation was at the rear suspension mount which is correct on the lines of weight distribution.

6.2 ANALYTICAL SOLUTION:

F = 3333 N

L = Distance between diagonally opposite suspension mounts=490mm

D = Vertical deformation in suspension mounts

Θ = Angular deformation

Tan(θ)= D/(L/2)

Torsional Stiffness = (F x L) / θ.

D=1.252 mm

Torsional Stiffness= 4.8 KNm/degree

Thus optimized design satisfies the torsional stiffness requirement.

6.3 Loading and Boundary Condition:

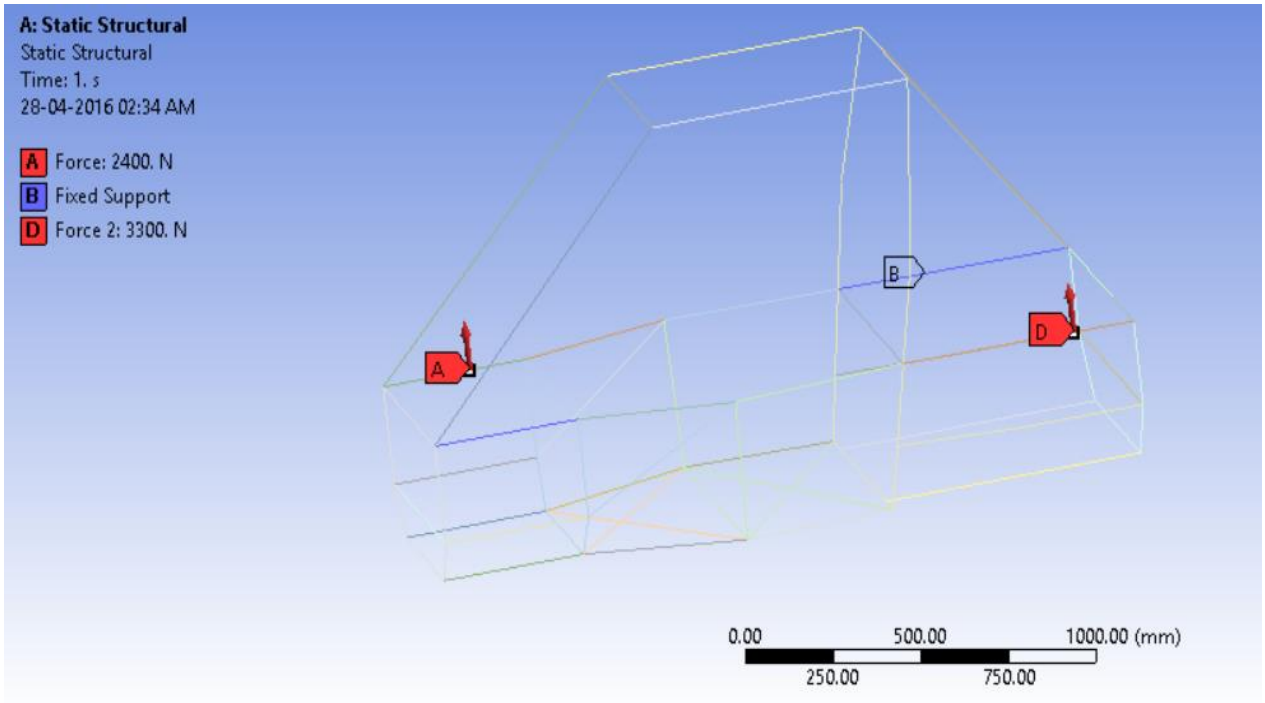

Fig 6.1: Torsional Loading and Boundary Condition

Front suspension point Force along positive Z-direction = 2.4 KN

Force at the diagonally opposite suspension point at the Rear along the positive Z-direction = 3.3 KN

The Diagonally Opposite Suspension Mountings are fixed in all six DOF.

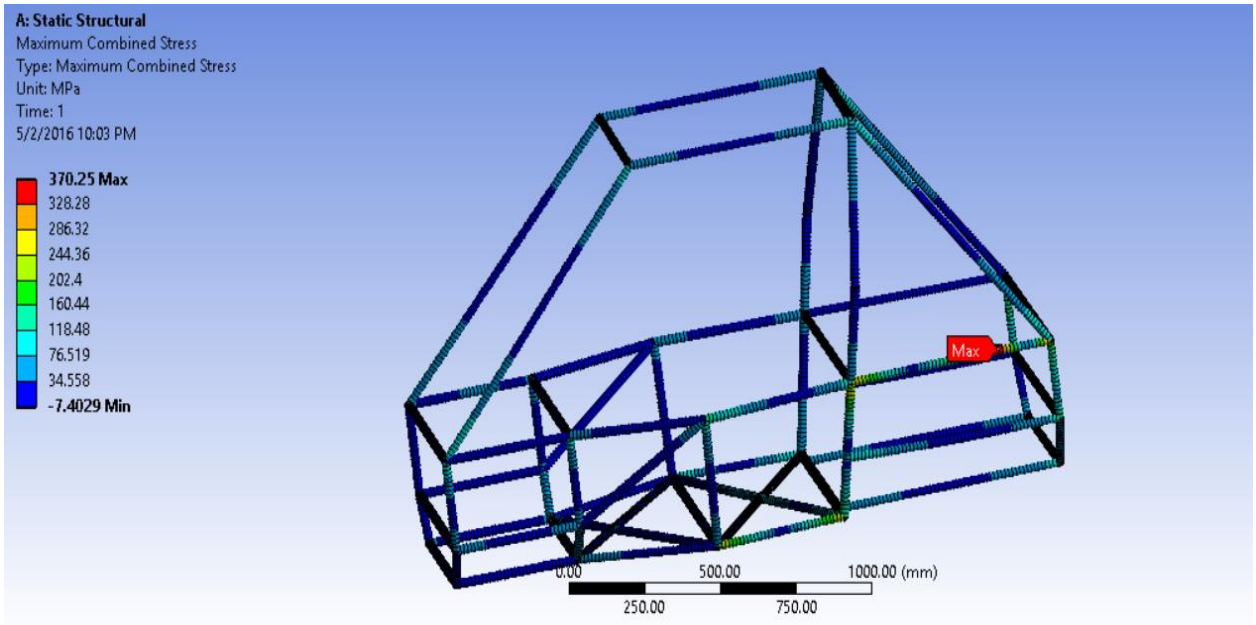

Fig 6.2: Maximum Combined Stresses in the chassis under torsional loading

The design points from optimized Roll over impact were updated in the model for torsional impact. The static structural analysis was run considering the couples. The analysis showed that the longitudinal members below the driver seat were under high stresses. The cross sections of these members were set as design variables. The optimization study was performed.

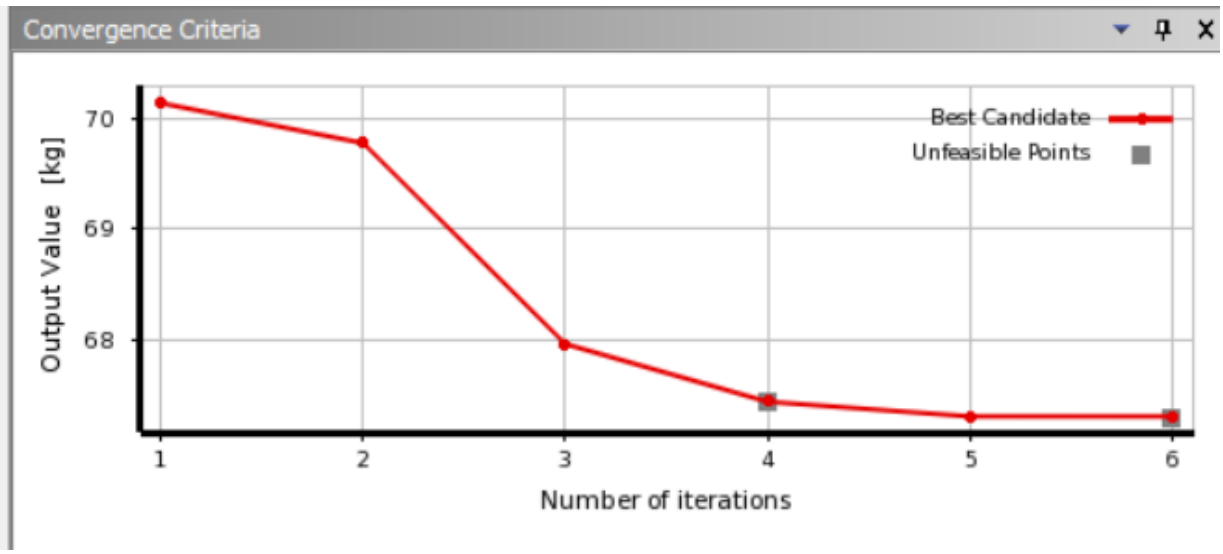

Fig 6.3: Mass Convergence

Parameter Ri, Ro – CircularTube#	Initial Ri,mm	Initial R0,mm	Ri, mm	Ro, mm
P1, P2 – CircularTube13	11.13	12.7	12	14.835
P12, P13 – CircularTube5	11.13	12.7	12	15.351
P26, P27 – CircularTube11	11.13	12.7	12	14.555

Table:6.1 Torsional analysis candidate points

The final optimized mass after torsional impact was 60.879 kgs and maximum stress was 227.01 Mpa.

7. System Integration Study

An All-terrain vehicle is subjected to various dynamic and static loading such as Front, side and roll over impact along with various mode shapes. After the individual subsystems are optimized then it is necessary to integrate them together and come up with an overall system optimum. Since using All-in-one approach was too complicated given the large number of design variables, decomposition method was used. Local variables for individual subsystem were identified. This was followed by definition of the master optimization formulation which accounted for common design variables among the subsystems. The iterative loop was then performed wherein the master problem was solved with respect to common design variables (individual local variables fixed) and the subproblems were solved with respect to the local variables (common variables fixed). Trade off analysis between the Maximum stress and the mass of the chassis was performed.

OVERALL SYSTEM OPTIMIZATION FORMULATION:

Objective : Minimize Overall Mass

Mass = f (Ro, Ri)

Subject To *:*

Combined Loading: Front + Side + Roll Over + Torsional

i) Yield Strength= 460 MPa

ii) Factor of Safety >= 2

iii) Inner radius (Ri)

Lower Bound = 7 mm

Upper Bound = 12 mm

iv) Outer radius (Ro)

Lower Bound = 12.7 mm

Upper Bound = 16.7 mm

Bounds for "8"Combined Design Variables

Since the weight is the function of the geometry, it depends on all the design variables combined from individual subsystems. We have 54 tubular members, taking both the inner and outer radii of each member gives us a total of 108 design variables. Due to limitation on the available optimization packages concerning the maximum number of parameters that can be used for the DOE (20 for Design of Engineering Experiments for Latin Hypercube Sampling), we had to make certain assumptions.

Keeping in mind the objective of each subsystem, the following assumptions were made:

7.1 Combined Loading Condition

To start with system optimization we analyzed the frame subjected to combined loading.

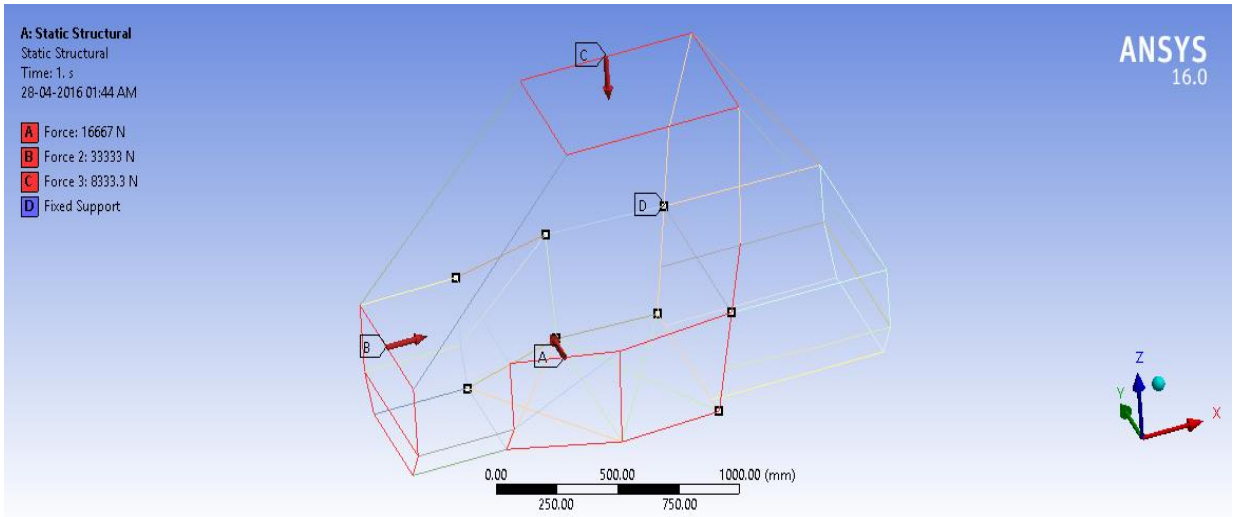

Fig 7.1: Combined Loading and Boundary conditions

This combined loading resulted in the following stresses being generated in the chassis.

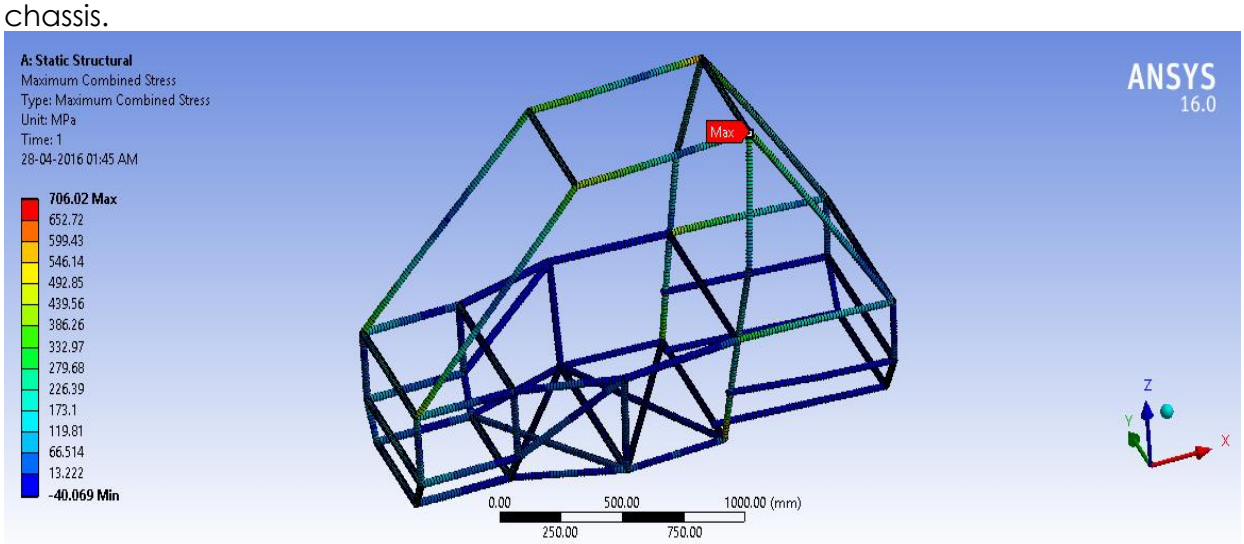

Fig 7.2: Stresses induced in the frame due to the combined loading

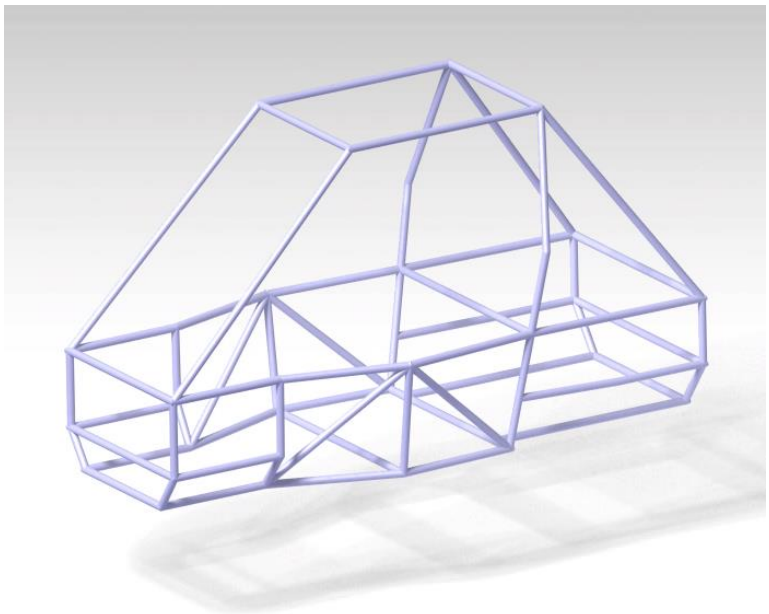

Fig 7.3: Initial Design (CATIA)

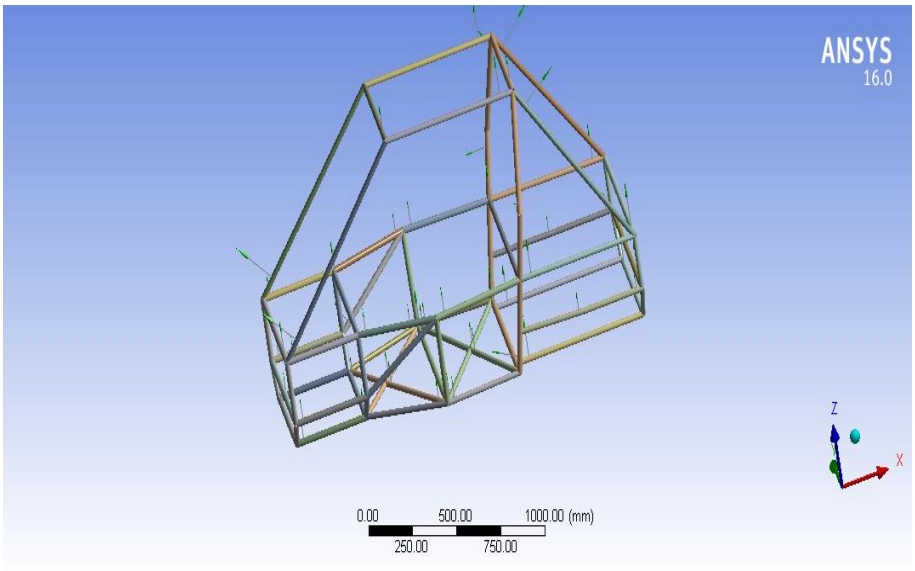

Fig 7.4: Initial Design (ANSYS)

The analysis helped us in identifying the members which were under high stress. Hence we decided the common design variables for overall system optimization. The lateral member below rack mounting, firewall members, front roll over hoop were the common members. This gave 8 common design variables. The flow chart to carry out the optimization loop is as below:

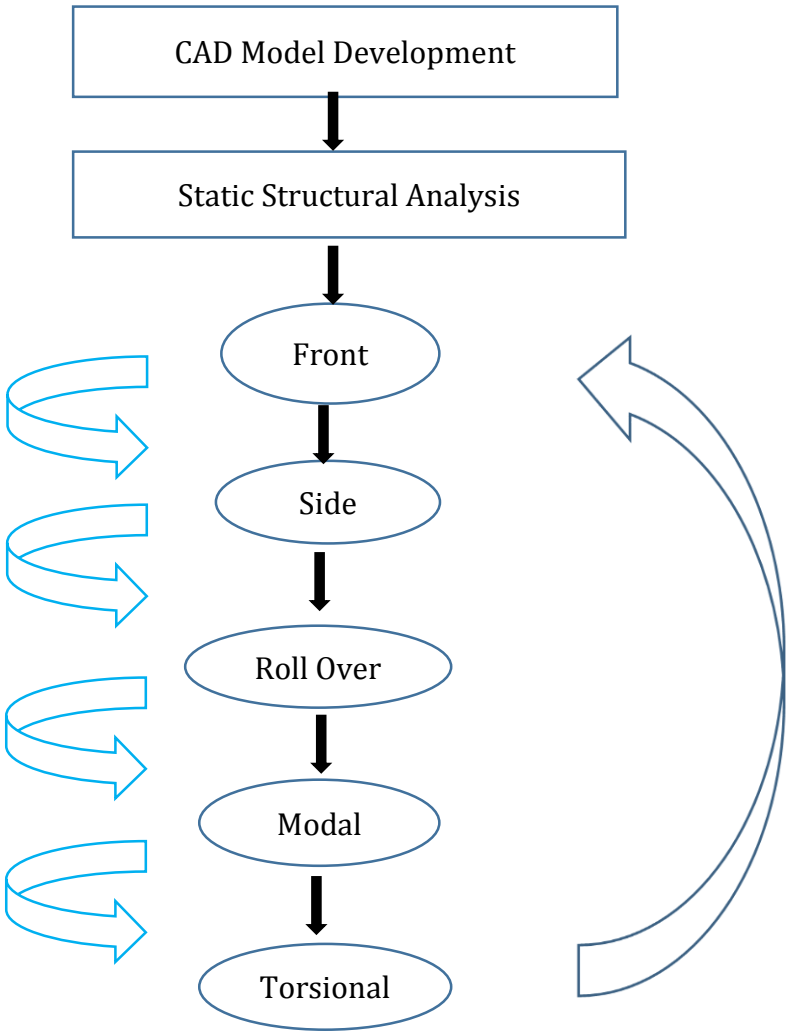

Fig 7.5: Flowchart showing scheme of iterative loop

Loop 2:

Front impact analysis was performed and the design was optimized satisfying all the constraints. Then the optimized values from the front impact were updated on the geometry. These updated model was used for side impact optimization. As the lateral members for rack mounting were common members, they were used as combined design variables (shown in yellow) for front and side impact. Now, the optimization loop was run and design was optimized for side impact. The common design variables were updated to the front optimized design to check for the trade-off.

Parameter Ri, Ro - CircularTube#	Initial Ri,mm	Initial R0,mm	Ri, mm	Ro, mm	Loop 1 Ri	Loop 1 R0
P54, P55 - CircularTube1	11.13	12.7	9.903788	14.30017	9.99212	14.20847
P56, P57 - CircularTube2	11.13	12.7	9.905889	14.29801	9.78244	14.40183
P58, P59 - CircularTube3	11.13	12.7	9.825921	14.37717	9.80074	14.38194
P64, P65 - CircularTube6	11.13	12.7	9.669966	14.53162	9.67211	14.53275
P66, P67 - CircularTube7	11.13	12.7	9.670029	14.53164	9.69047	14.53275
P69, P68 - CircularTube8	11.13	12.7	9.666101	14.53579	9.77251	14.45948
P70, P71 - CircularTube9	11.13	12.7	9.683794	14.518	9.68453	14.43281
P76, P77 - CircularTube12	11.13	12.7	9.70517	14.49688	9.74652	14.48741
P94, P95 - CircularTube21	11.13	12.7	9.714686	14.48744	9.73145	14.47652
P102, P103 - CircularTube25	11.13	12.7	9.633942	14.56738	9.64513	14.39474

Table 7.1: Loop candidate points front

As it is clear from the table, the cross sections of the members 8, 9, 12, 25 which are connecting to the common variables would change. Circular tube 2 and 3 are common design variables. Thus the corresponding mass would also change. After updating the design variable, the optimized mass for the front design is reduced by 1.237 kgs, whereas the stress value has increased by 14 Mpa. This is a trade-off.

7.2 Optimization results:

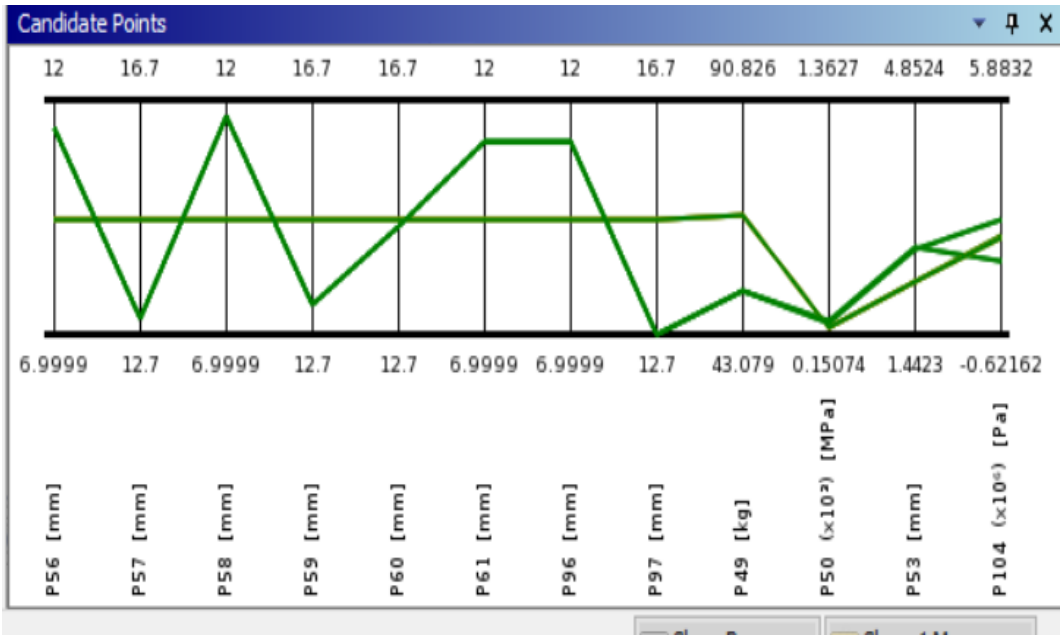

Fig 7.6: The eight common design variables

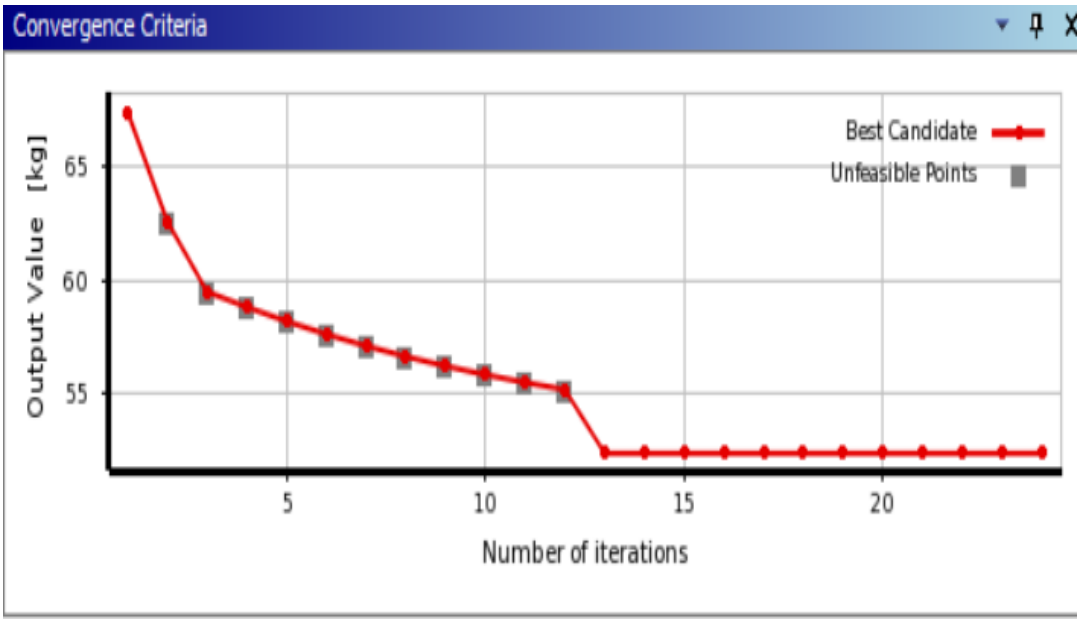

Fig 7.7: Mass Convergence

Now the loop is continued for the roll over impact. The optimized points from side impact were updated in the model. The firewall members were common design variables between side and roll over impact. The optimization run was carried out for roll over impact. As it is clear from the table, the cross sections of the members 16, 17 which are connecting to the common variables would change. Circular tube 4 are common design variables. Thus the corresponding mass would also change. Now the mass reduced to 57.24 kg but the stress increases. The following results were obtained for the change in design variables. The optimized mass from side impact was initially 58.09 before iteration.

Parameter Ri,Ro - CircularTube#	**Initial Ri,mm**	**Initial R0,mm**	**Ri, mm**	**Ro, mm**	**Loop 1 Ri**	**Loop 1 R0**
P60, P61 - CircularTube4	11.13	12.7	12	15.05	11.34	14.96
P56, P57 - CircularTube2	9.9058	14.29801	9.78244	14.40183	9.8245	14.0214
P58, P59 - CircularTube3	9.8259	14.37717	9.80074	14.38194	9.928	14.128
P84, P85 - CircularTube16	11.13	12.7	11.13	12.7	11.28	12.66
P86, P87 - CircularTube17	11.13	12.7	11.13	12.7	11.28	12.66
P96, P97 - CircularTube22	11.13	12.7	11.447	13.017	11.48	12.94

Table 7.2: Loop candidate points side

To continue the iteration, the geometry was updated after roll over optimization. Since there were no common design variables for modal and torsional impact, they were optimized independently. There is trade off analysis between mass and stress

which needs to be performed before finalizing on any of the optimized variables. Final optimized mass of the vehicle 60.789 and the stress 227.01 Mpa.

7.3 Validation:

To check if the selected cross sections meets the bending strength and stiffness criterion.

The graphs of bending strength and bending stiffness were plotted vs wall thickness for the selected candidate points. Candidate point corresponding to parameter 57 was chosen, since it is the common design variable for front and side impact. This candidate point plays important role in trade off analysis. (Figure 1)

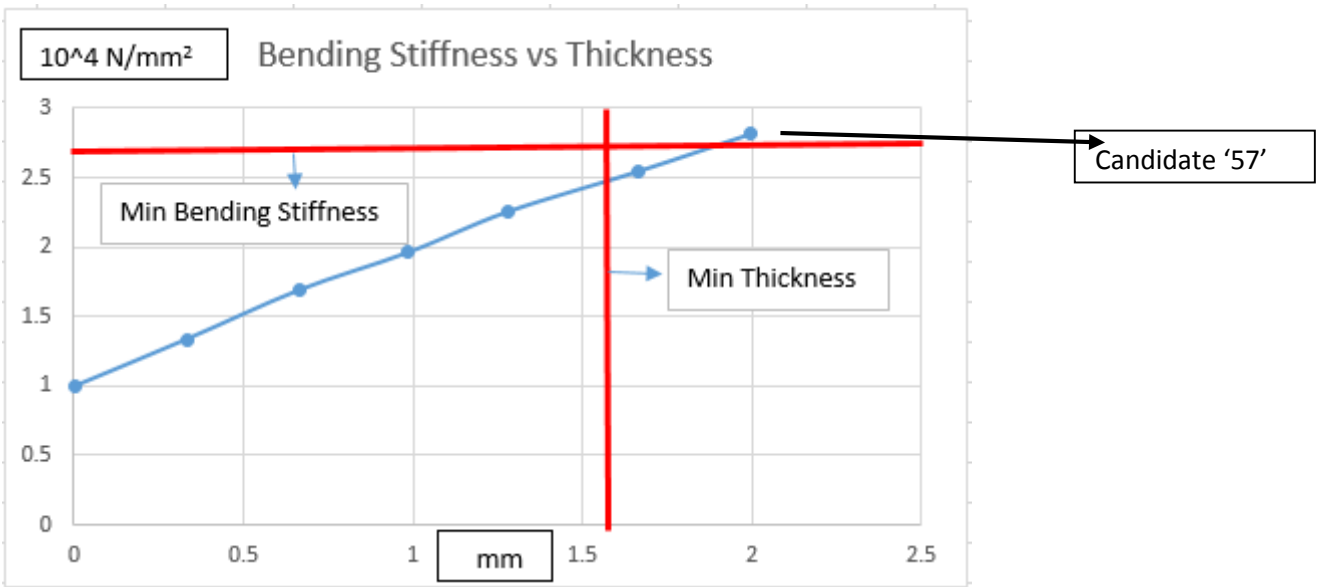

Fig 7.8: Bending stiffness vs thickness graph

Bending Strength =S*I/c

Bending Stiffness = E*I

I = Second Moment of Inertia = $\pi * (Ro^4 - Ri^4)/4$

From the graph we can see that the optimized any random selected candidate points meets the stiffness and the strength requirements.

Note:

In Loop 2, combined design variables for front, side and roll-over impacts were considered. The above optimum solutions were obtained at the end of loop 2. Due to computational limitations we limited the number of iterations to 2.

8. Conclusion

The designed chassis is analyzed for front, side, roll-over and torsion impacts. The optimized parameters from each analysis is carried over to the next analysis following the order of front, side, roll-over and torsion impact respectively. Since the optimized parameters are integrated at each subsystem, the whole chassis is optimized at the completion of the chain as it reaches the torsion analysis. The combined variable play a vital role in the optimization study to meet the objective of minimized weight. We see that the optimized weight of the chassis at the end of first iteration is found to be 60.789kg and the corresponding stress was found to be 227.01Mpa. The optimized values of parameters obtained at the end of the first iteration of the system integration loop all fall between the specified ranges. The stress obtained at the end of first iteration is 227.01Mpa which is less than 230Mpa which was set as the constraint on the Maximum combined stress, from which we can say that the model obtained after torsion is safe. Since the stress at this point is 227.01Mpa, anymore decrease in weight will lead to increase in stress which will then not meet the constraint of 230Mpa of maximum combined stress. Therefore we can say that the model obtained after torsion is both optimized for weight and is considered safe with a factor of safety of 2. However on relaxing the factor of safety, a chassis with much lesser weight can be obtained, but doing this will only compromise the safety of the driver which is of the prime importance during the designing of the car. Hence tradeoff analysis combined with optimization study can give us better approximation of the possible optimized weight.

9. REFERENCES

1. *A Vibration Analysis Of Vehicle Frame* by Yogendra S. Rajput et.al

2. *Static Analysis and Optimisation of Chassis and Suspension of an All-Terrain Vehicle* by Thanneru Raghu Krishna Prasad et.al

3. *Stress Analysis of Roll cage for an All Terrain Vehicle* by Mahesh .P. Sharma et.al

4. *BAJA SAE Series Rules* , www.sae.org/students/mbrules.pdf

5. *https://en.wikipedia.org/wiki/Latin_hypercube_sampling*

6. *http://www.ai7.uni-bayreuth.de/nlpqlp.htm*